NO. 20 NOTES FROM THE SHOP $2.50

Woodsmith®

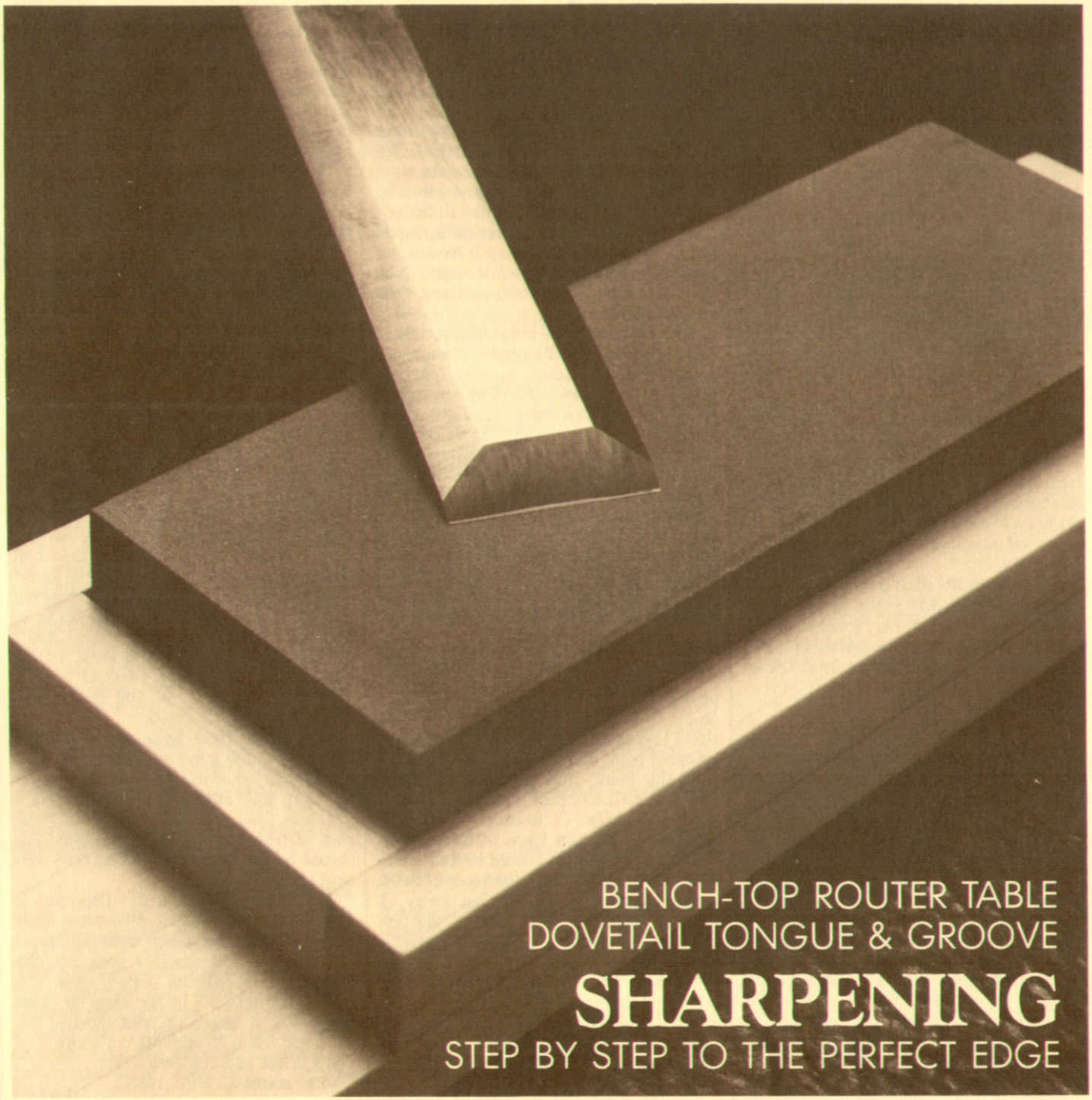

BENCH-TOP ROUTER TABLE
DOVETAIL TONGUE & GROOVE

SHARPENING

STEP BY STEP TO THE PERFECT EDGE

Woodsmith

Number Twenty **March, 1982**

Editor
Donald B. Peschke

Design Director
Ted Kralicek

Art Director
Jon Snyder

Assistant Editor
Steve Krohmer

Graphic Designer
Marcia Simmons

Subscription Manager
Sandy J. Baum

Subscription Assistants
Christel Bork
Donna Prins

Administrative Assistant
Cheryl Scott

Contributing Editor
Adolph E. Peschke

WOODSMITH (ISSN 0164-4114) is published bimonthly (January, March, May, July, September, November) by Woodsmith Publishing Co., 2200 Grand Ave., Des Moines, Iowa 50312.
WOODSMITH is a registered trademark of the Woodsmith Publishing Co.

©**Copyright 1982** by Woodsmith Publishing Co. All Rights Reserved.

Subscriptions: One year (6 issues) $10, Two years (12 issues) $18. Single copy price, $2.50 (Canada and Foreign: add $2 per year.)
Change Of Address: Please be sure to include both your old and new address and a mailing label from a recent issue.
Postmaster: Send change of address notice, Form 3579, to Woodsmith Publishing Co., 2200 Grand Ave., Des Moines, Iowa 50312.

Sawdust

When we started to put together this issue, I fully intended to have a step-by-step article on cutting half-blind dovetails (as a follow-up to the last issue's article on through dovetails.) But things didn't work out the way we planned. Here's what happened.

In addition to the article on half-blind dovetails, we thought it would be a good idea to include the how-to on cutting a dovetail tongue and groove joint. To cut this joint we needed a router table. So, this was the perfect opportunity to design a new router table (to update the one shown in *Woodsmith* No. 5).

Ted and I agreed that this new router table should be a bench-top model. We tossed around ideas on the pros and cons of the "store-bought" models, and came up with a list of changes we'd like to make.

We decided the new router table should 1) have a fairly large table, 2) have a low profile for a comfortable work height, 3) be easy to clamp to any workbench, and 4) be easy to store.

Ted came up with a design that met all of these criteria, and I suggested we use a scrap piece of kitchen counter (particle board with a *Formica* top). The new router table worked like a charm . . . for a while. Then the top warped so badly we couldn't use it to cut the dovetail tongue and groove (the original point of this whole effort).

We switched to plywood and *Masonite* for the top. And this time it didn't warp. In fact, I got so carried away with how well this new router table worked that I thought a couple of projects using the new router table would be ideal for this issue. So, we built the Wall Shelf (page 20) and the Bread Board (page 24).

Since we were working with the router so much, we thought a larger project might be in order. That's when we started work on the Buffet Table (page 14). The half-circle leaves are cut with a router and a trammel point attachment.

At this point, half the issue was filled and still no half-blind dovetails. Then I started thinking . . . in order to cut half-blind dovetails you have to have *sharp* chisels, so maybe we should include some of the methods we use to sharpen chisels.

Once again, I got carried away. I thought we could show how to sharpen chisels in two pages . . . we wound up with almost seven pages. And that's before Steve called the folks at the Norton Co. to ask a few simple questions (which turned into a three-page interview).

All in all, I'm happy with the way things turned out, even though we never did get to half-blind dovetails.

SHARPENING. As if seven pages isn't enough on sharpening, I have a few other comments I'd like to make. First, concerning the wheel used to grind the bevel on a chisel. If you have it in your budget, I think the *Norton* grinding wheels discussed in this issue are well worth the investment.

You won't believe how much difference there is between a proper *(Norton)* wheel and one of those all-purpose wheels that are standard on most grinders. Since no catalogs (that we know of) carry *Norton* wheels, you'll have to locate a Norton distributor in your area. In addition to the grinding wheels, he'll probably also have the factory oil-filled stones (these are a good deal too).

In the articles on sharpening in this issue, we talked only about chisels. Why not include plane irons? They're sharpened the same way aren't they?

Plane irons (cutter blades) are indeed sharpened exactly the same way as chisels. (I use a 25° grinding angle and then hone a micro-bevel on the cutting edge at a slightly steeper angle.)

However, when a chisel is sharpened, it's ready to use, as is. A plane iron, on the other hand, must be mounted in a plane. There are a lot of other problems associated with planes in order to make them work properly. We'll be running a complete article on using and adjusting planes in a future issue.

LATE NOTE. It never fails. Just when we were wrapping up this issue we received a *Frog* Tool Catalog. In it they list almost all the equipment we use: fine/coarse *India* combination stones, a leather stropping pad, the diamond stones, small sticks of buffing compound (including rouge), and a combination *India*/soft *Arkansas*. If you want to get this catalog, send $2 to Frog Tool Co. Ltd., Dept. W, 700 W. Jackson Blvd., Chicago, IL 60606.

NEW FACES. Once again we've added a new face to the gang at *Woodsmith*. Jon Snyder has joined us as our new Art Director. Jon has exceptional talents with graphics, design, and photography (he shot all the photos for this issue). We should be on the road to a better *Woodsmith* with Jon's help.

Ted Kralicek (the old Art Director) is now the new official Design Director. He's in charge of all the design work, and most of the actual building that goes into the projects in *Woodsmith*. Every once in a while, Ted lets me in the shop to build something or sweep up. But most of the work you see in *Woodsmith* is the result of Ted's talent and craftsmanship.

NEXT MAILING: May, 1982.

Tips & Techniques

TABLE SAW SETUP

Most of the table saws that I've used have been out of square in one way or another. I use a simple test to determine whether or not the saw's table (and the miter gauge channel) is square with the saw blade.

First, place a straight-edge flush against the raised saw blade. Clamp the straight edge in place and lower the saw blade. Using a piece of scrap wood, butt the wood against the straight-edge at the front of the table and clamp it to the miter gauge. Then slide the assembly toward the rear of the table.

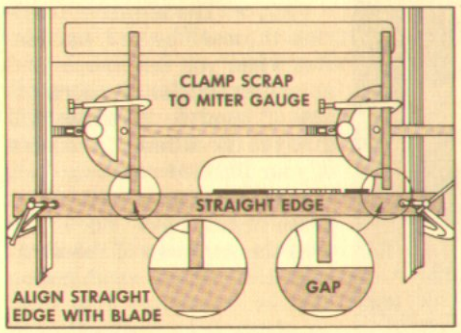

If the table and the blade are not square with each other, one of two things will happen. The board will either pull away from the straight-edge, or it will bind into the straight-edge. If it binds, follow the same procedure, but start from the back of the table. If there's a gap, it indicates that there's an error in the table-to-blade alignment.

Adjust the position of the trunnion in the direction you would have had to move the straight-edge to close the gap. Recheck the alignment using the same method and repeat this procedure until the board is no longer pulling away from the straight-edge. Then repeat the same test starting from the opposite end of the table.

Be sure to move the straight edge flush with the saw blade each time the trunnion is moved. When there's no gap after testing from both ends of the table, the saw blade (and the miter gauge channel) is aligned with the table top.

Richard Barron
Jackson, Mississippi

STAINING TAMBOUR CANVAS

Most articles on roll top desks recommend using unprimed white canvas to fasten the tambour slats together. The problem I've encountered is that white canvas shows through even the slightest opening between the slats, especially if they're stained.

To eliminate this problem, I dye the canvas black. Then after it is dry, I smooth it out using an iron. Next I apply the glue to the back of the stained tambour slats and attach them to the canvas in the normal fashion.

Even as the canvas stretches, I'm sure it won't be noticeable between the slats.

Charles L. Robers
Waukesha, Wisconsin

RADIAL ARM SAW TABLES

I've had a problem with the saw kerfs in the surface of my radial arm saw table. The saw kerfs accumulate to the point that there's quite a large gap in the table.

To avoid replacing the surface of the table every time it gets bad, I rout a slot in the table, slightly off-center with the blade, to accept an insert of ¼" plywood. The inserts are about 2" wide, and as long as the table is deep. They fit in the table slightly off-center with the blade.

When the insert gets chewed up, just turn it end for end. Because the insert is slightly off center with the blade, you'll get

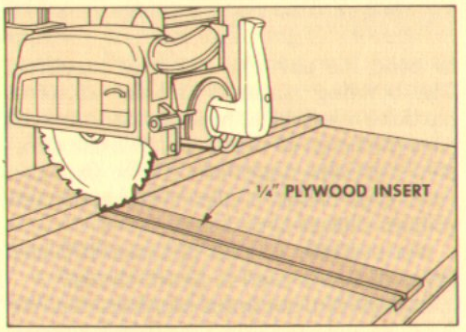

a fresh surface for the saw kerf. By turning the insert over, you've got two more new surfaces, or a total of four per insert.

An added advantage to a clean saw kerf is cutoff accuracy. By making your cutoff mark on the bottom edge of the board, the mark can be very easily aligned to either the right or the left edge of the saw kerf.

L.A.D. Colvin
Satellite Beach, Florida

ROUTER JIG FOR THE RADIAL ARM SAW

In several of your back issues, you mention using the drill press for routing operations. Because the highest speed on my drill press is only 4700 RPM, I don't feel it's very ideal for routing.

For those of us lucky enough to have a radial arm saw, an adapter can be purchased to attach the router to the radial arm saw. The adpter is available from: *Home and Industry Tool Dist. Ltd.*, 2867 Long Beach Road, Oceanside, N.Y. 11572.

The adapter is available for various sizes router motors and radial arm saws.

Donald C. Druce
Longueuil, Quebec

EASY JIG FOR RAISED PANELS

Here's a method of cutting raised panels that is similar to the method you use, but I think it's a bit quicker, a bit more accurate, and a whole lot safer.

The first step is to attach an auxiliary fence to the rip fence on the table saw. Then the jig is made out of scrap wood with

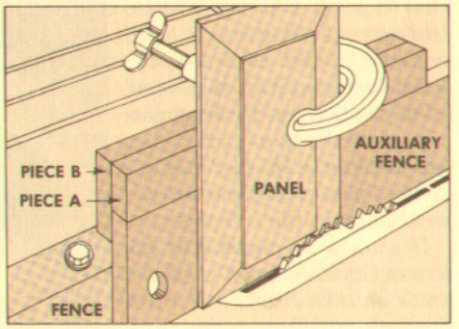

the following restrictions:

1. Piece A must be the same thickness as the auxiliary fence.
2. Pieces A and B should be about the same length as the panel being cut.
3. Piece B must clear any obstructions on the top of the rip fence (*Sears* rip fence has adjusting bolts on the top of their rip fence).

Clamp the panel to be cut to piece A and slide the jig along the auxiliary fence. Clamp as low as possible on the panel, but do not place the clamp below piece A or the jig will bind on the fence.

Frank Nagy
Columbus, Ohio

SEND IN YOUR IDEAS

We invite you to share your woodworking tips and techniques with other readers of *Woodsmith*. We will pay a minimum of $5 for a tip, and $10 or more for a special technique. All material submitted becomes the property of Woodsmith Publishing Co. Upon payment, you give *Woodsmith* the right to use the material in any manner for as long as we wish.

If your idea involves a drawing or photo to explain it, do your best and, if necessary, we'll make a new drawing, or build the project or jig and photograph it. (Any drawings or photos submitted cannot be returned.)

Send your ideas to: *Woodsmith*, Tips & Techniques, 2200 Grand Ave., Des Moines, Iowa 50312.

The Nitty-Gritty On Stones

AN INTERVIEW WITH THE NORTON COMPANY

We wanted to get more information on the care and use of bench stones, so we went straight to one of the largest manufacturers of stones: The Norton Co.

After talking with Norton, we were amazed at the wealth of information they gave us. In fact, we've even changed some of our methods and equipment as a result of the interview.

The first section of the interview is with Patrick Cullin, Industrial Engineer, and deals with bench stones. In the second section, Phil Wettengel and Paul Glavin, Product Engineers, discuss grinding wheels. And in the last section, we list the sources for the items mentioned in the interview.

It should be noted that the names Crystolon *and* India *are trade marks for the Norton Company's silicon carbide and aluminum oxide products.*

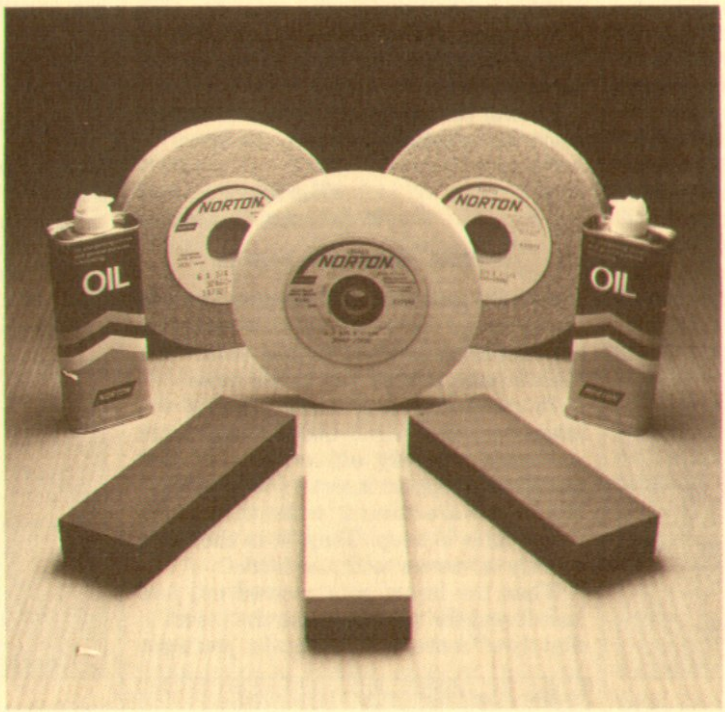

WOODSMITH: Could you give us some basic information on the difference between the *Crystolon* and *India* stones? What they're made of, what they're bonded together with, and what their advantages and disadvantages are and so forth. Just some solid background information on the stones.

CULLIN: Well, the *Crystolon* stone is a product made out of coke and silica fired at very high temperatures. The temperature of the furnace that does this is approximately 4500 degrees Fahrenheit. This forms a big block which is broken up with sledge hammers and then crushed in size to abrasive particles. The different types of *Crystolon* abrasives represent the different stages of purity of the particles themselves. So silica and coke are the basic materials of silicon carbide.

Aluminum oxide or *India* stones are a different type of material altogether. Aluminum oxide is a mixture of bauxite, coke, and iron pilings. Again, the mixture is fired in a very high-temperature furnace, broken down with sledge hammers, and crushed to size to make the different size grits of aluminum oxide.

WOODSMITH: What type of bonding material is used to bond the abrasive particles of the *Crystolon* and *India* stones?

CULLIN: There are various of types of bonds on the market. Most of the Norton products use a ceramic or glass-type bond to bond the abrasive particles together. The bonding material and the abrasive particles are fired at high temperatures to cure the bond, so that it will hold the abrasive particles together. There are also resin-type bonds, shellac-type bonds, and sodium silicate-type bonds.

WOODSMITH: Are all of these different types of bonds used in bench stones?

CULLIN: No, not in our bench stones. We only use a ceramic-type bond in our bench stones. But there are bench stones on the market that use the other types of bonds.

WOODSMITH: When you actually make the stone, let's say the *Crystolon* stone, you take the silicon carbide that has been crushed to pre-determined size and then how do you combine it with the bonding material and create the actual stone?

CULLIN: We actually take a mixing pot and mix the bonding material and the abrasive particles and put them in a die. It's then put under pressure to create a density that we know we want for a preknown hardness . . . if it's fired at the right temperature and for the right length of time.

WOODSMITH: So it's a combination of pressure and heat that creates the final product?

CULLIN: Pressure first, then heat. Not pressure and heat at the same time.

WOODSMITH: Isn't it true that *Crystolon* stones are harder than *India* stones?

CULLIN: Not necessarily, no. The *Crystolon* products that we sell are, without a doubt, softer than our *India* products. Of course there is a difference in the abrasive particles: they are two different materials altogether. Remember, we're talking about vitrified bond or bonded abrasives, not abrasive particles by themselves.

WOODSMITH: Isn't it true though, that silicon carbide is harder than aluminum oxide?

CULLIN: The abrasive particles themselves are harder. But when you mix bonds and abrasive particles, the percentage of bond to abrasive will give you the different hardness of your finished product.

WOODSMITH: I see, so it doesn't really have to do solely with the hardness of the abrasive itself, it's a combination of . . . .

CULLIN: It's a combination of the abrasive, of the bond, the pressure, the density, the firing temperatures, the time cycle . . . .

WOODSMITH: A multiple of factors?

CULLIN: Yes.

WOODSMITH: How do the *Crystolon* and *India* stones compare when sharpening woodworking tools?

CULLIN: In relation to woodworking, the *Crystolon* stone could be used with any woodworking tool. It will give you a faster cut than the *India* stone, it will attack the metal faster, and break it down faster. But the aluminum oxide or *India* stone will give you a finer cutting edge. It takes longer to put an edge on with an *India* stone than it does a *Crystolon* stone, but you end up with a much finer edge. The much harder natural *Arkansas* stone will take even longer, but you will end up with a much finer edge than you would with the aluminum oxide or *India* stone.

WOODSMITH: Now that you've brought up the *Arkansas* stones, how do they compare with the *India* and *Crystolon* stones?

CULLIN: *Arkansas* stones are the ultimate in natural sharpening stone products. They will give you the ultimate edge you can possibly get. Because of their extreme density and very fine grit, they're for more of a honing operation than sharpening. They would be something that you would use for acquiring the finest possible edge.

WOODSMITH: For most general wood-

working applications, let's say for plane irons or bench chisels, would a soft *Arkansas* stone be sufficient for a fine edge? Or would a hard *Arkansas* stone be . . . .

CULLIN: For myself, I wouldn't go beyond the fine *India* stone . . . the fine aluminum oxide stone. I don't feel you need any further honing of the edge.

WOODSMITH: On your *Crystolon* and *India* bench stones, what's the difference between using oil and water as a lubricant? I believe you recommend oil, don't you?

CULLIN: Yes. We recommend oil for all of the artificial products like aluminum oxide and silicon carbide. And water for natural products like the *Arkansas* stones. The main purpose of either oil or water is to prevent the metal particles from becoming embedded in the surface of the stone. This causes the stone to become glazed, which is when the surface of the stone is filled with metal particles. Glazing prevents the abrasive crystals from sticking through and doing the actual cutting.

WOODSMITH: Are there any preventive measures that can be taken to eliminate glazing of the stones?

CULLIN: Using an oil, of course, for artificial products and water for natural products. The purpose of the oil or water, is to pick up the metal particles and put them in a suspension so that when you clean the stone afterwards, you clean the metal particles away so that they don't become embedded in the stone. All of our industrial stones are oil filled at the factory.

WOODSMITH: Is this the same type of oil that we use to . . . .

CULLIN: No, it's in a paste form at room temperature and its consistency is similar to Vaseline.

WOODSMITH: How do you get this thick oil into the stones? Are they heated?

CULLIN: Yes, they are heated to 190 degrees.

WOODSMITH: When we start working with new stones, they seem to keep absorbing all of the oil rather than allowing it to stay on the surface and pick up the metal filings.

CULLIN: All of our *industrial* bench stones are oil-filled at the factory. However, there are some items that are sold through the consumer division which are blister packaged. These products are not oil-filled because the oil will leak through the package. So you could have a stone that has not been oil-filled at the factory.

WOODSMITH: So the stones we're using may just be trying to reach a point where they are saturated with oil?

CULLIN: Right. Until that stone is actually oil-filled, it will absorb oil. Once the stone is oil-filled, the oil will pick up the metal filings.

WOODSMITH: You said you recommend water for your natural stones, so you do recommend water for the *Arkansas* stones?

CULLIN: Yes, because an *Arkansas* stone will not absorb oil. And if it does, it will be a very small amount in the very top surface of the stone.

WOODSMITH: One problem that we have encountered with our bench stones is trying to keep them flat. And after they have become dished out, determining the proper procedure for flattening them. The stones which we use the most are the *Crystolon*, *India*, and the *Arkansas* stones. What would you recommend as the best way for the average woodworker in the home shop to keep the stones flat?

CULLIN: Almost impossible.

WOODSMITH: Almost impossible?

CULLIN: There is a method that can be used. By using a piece of flat cast iron and a loose abrasive approximately 70 to 90 grit.

WOODSMITH: An abrasive like silicon carbide slurry?

CULLIN: Yes, like silicon carbide or any good abrasive slurry. Aluminum oxide could be used, too. Silicon carbide probably works better because it doesn't break down as fast.

WOODSMITH: How is the silicon carbide slurry used on the cast iron plate?

CULLIN: The method is to take the surface of the stone and rub it on the silicon carbide abrasive and a cast iron plate by applying pressure and doing it in a circular motion. The silicon carbide or *Crystolon* stones probably finish up a lot easier than the aluminum oxide or *India* stones.

WOODSMITH: Or the *Arkansas* stones?

CULLIN: The *Arkansas* stone would be extremely hard to do because of its fineness and hardness. It could be done, but it would take an awful lot of effort.

WOODSMITH: Is this something you would recommend someone do periodically to keep the stone flat rather than waiting until the stone is in really bad condition and then trying to do the maintenance?

CULLIN: The sooner you do it, when you first start getting a dip in the stone, the easier it will be because you haven't got that much material to remove to get back to a flat surface. The ideal way, of course, is to use an abrasive slurry on a lapping plate attached to a rotating bed. The reason for the rotating bed is that the machine is doing the moving. It's not an easy job to do.

WOODSMITH: I've heard of some people using plate glass. The experience we've had with it is that the abrasive starts cutting into the glass faster than it does in the stone. This creates a dish in the glass so that you are no longer working with a flat surface.

CULLIN: The glass is not the ideal plate. You are going to ruin the glass completely. It is also going to eat into the cast iron plate, but you can always machine it. The cast iron plate will last a long time. The thing is, you do it in a circular or rotation movement on the cast iron plate. You're actually lapping the plate at the same time you're lapping the stone.

WOODSMITH: So you should try to work the whole surface of the iron plate so that it works down evenly, too.

CULLIN: Yes.

WOODSMITH: When you're lapping a bench stone with an abrasive, the texture on the surface of the stone seems to be altered. How does the surface texture affect the sharpening qualities of the stone?

CULLIN: It affects it quite a bit. You will change the surface of the stone. The stone originally has a lapping bed finish on it, done normally with a fine abrasive. The finer the abrasive you use, the smoother or finer texture surface you are going to get. The thing is to have that surface not too rough and not too fine. What you are trying to do is to open up the pores of that surface so that you have the abrasive particles sticking up to do the sharpening.

WOODSMITH: If the surface becomes too coarse, will the stone be cutting as if it were a coarser stone?

CULLIN: Yes, it will.

WOODSMITH: By using a fine slurry, will you be able to retain the surface texture fairly close to the original surface texture?

CULLIN: Yes. You will get a different effect by doing it by hand as compared to doing it on a rotating bed. But the difference will not be that great.

WOODSMITH: If you should get it overly smooth, will the cutting action be reduced?

CULLIN: You'll have to lap it before too long because you are going to load the surface quickly because it's too smooth.

WOODSMITH: We tried to lap the stone using aluminum oxide and silicon carbide sandpaper on a piece of glass, rather than using a slurry. It did tear up the paper rather quickly, but are there any other problems with that idea?

CULLIN: No, not as long as you have an abrasive there. What you are trying to do is lap an abrasive with an abrasive. I'm afraid you'll find that the stone will eat into the paper so fast that you'll use up more paper than it would be worth to buy a new stone.

WOODSMITH: Whereas if you went to the slurry and a piece of steel, it would cut much quicker.

CULLIN: Yes, and of course the slurry . . . the silicon carbide abrasive . . . is still there and you can reuse it over and over and over. It will break down to the point that it becomes very fine and eventually it will have to be replaced.

WOODSMITH: Once a stone becomes glazed, what is the procedure for cleaning it?

CULLIN: The same as taking the dishing

out of it using the cast iron plate and silicon carbide slurry.

EDITOR'S NOTE: *We also wanted to find out about the care and maintenance of grinding wheels. For this information we talked to Phil Wettengel and Rich Glavin, Product Engineers for the Norton Company.*

WOODSMITH: We've been experimenting with dressing sticks and dressing wheels, or star wheels, to clean up our grinding wheels. Can you tell us the proper way to use these tools?

WETTENGEL: A dressing stick is generally just put up to the face of the wheel to open up the face and clean any metal that might be clogging the wheel. It'll clean the wheel, but it won't true it.

WOODSMITH: So it takes off the glazing?

WETTENGEL: Right, exactly.

WOODSMITH: Is there any way you can keep glazing from building up on the wheel? Are there any maintenance procedures which will keep it from getting bad? Or do you just have to hit with a dressing stick every so often?

WETTENGEL: Ideally, you try to get the right wheel specifications for whatever material you're grinding. With the right specifications, the wheel will break down at a certain point before it gets to where you would have to dress it. It will "self-dress," more or less.

WOODSMITH: So if you have a wheel that is matched for your purpose, you really shouldn't have too much of a glazing problem?

WETTENGEL: Right, it would be very minimal. I'm not going to say none, because that would be very difficult to achieve. If you get no glazing, the wheel is probably so dog-gone soft that it won't hold its shape. It won't hold the shape of what you are grinding, and it will wear away so fast that you will not be utilizing all of the abrasive. So you want to make sure it's hard enough to utilize all of the abrasive grains.

WOODSMITH: What are the dressing (star) wheel and the single point diamond used for?

WETTENGEL: Generally the dressing (star) wheel would actually be called a truing wheel. Either the truing wheel or the single point diamond will be both true and dress the wheel. Most people find it easier to use a single point diamond than a truing wheel to true and dress the wheel. You can mount the single point diamond on a block and just pass it back and forth across the face of the wheel and that will dress and true it right up.

WOODSMITH: Are there any guidelines for purchasing wheels for woodworking tools?

WETTENGEL: Generally speaking, you're talking about tool steel that is fairly hard. So you'll want a cool cutting wheel to keep the burn down, because burn damages that kind of steel. On tool steel, Norton recommends 32 *Alundum* or 32A. 32A is a real cool cutting abrasive, and can be used either wet or dry.

The 32A is an off-white wheel that's a form of aluminum oxide, towards the pure end of the spectrum. If you want a very, very soft action and a very cool cut you'll go to a 38A, which is the purest form of aluminum oxide you can get. Probably the ideal general purpose wheel for woodworking would be a 32A-60-I-8-VBE or something close to this.

EDITOR'S NOTE: *After talking to Phil at a later date, he gave the following guidelines to use when purchasing Norton grinding wheels.*

1. *Use a 32 or a 38* Alundum *wheel (type of abrasive)*
2. *46 or 60 grit for general grinding, 100 grit for finishing*
3. *Either H, I, or J grade (hardness)*
4. *Either 5 or 8 structure (spacing of the abrasive grains)*
5. *Vitrified bond "VBE" (bonding method)*

Any Norton distributor should be able to supply you with a wheel within these guidelines, which will work well with any woodworking application.

WOODSMITH: When we use the grinding wheel for grinding woodworking tools, we've been tempted to use the side of the grinding wheel rather than the edge. Are there any problems with using the side of a grinding wheel?

GLAVIN: The type of wheel found on most bench grinders is a type one, or a straight wheel. This type of wheel is not to be used on its side. This is an unsafe practice and should *never* be used.

WOODSMITH: So the normal grinding wheel found in a woodworking shop should not be used on its side?

GLAVIN: That is correct. You should use the face or the perimeter of the wheel only.

OUR CONCLUSIONS

After conducting the interviews with the Norton Co. officials, we tried to locate all of the different items that had been mentioned. At times, this seemed like the most difficult part of the article. Some of the grinding wheels weren't available at our local Norton distributor, and many of the cleaning and truing devices were nowhere to be found in many of the major woodworking mail order catalogs.

GRINDING WHEELS. We informed Norton that we could not purchase their 32A-60-I-8-VBE wheel at our local Norton distributor because he did not have it in stock. For him to order it for us, we would have had to pay a minimum per item charge that was considerably higher than the $20.00-$30.00 price of the wheel. Then Phil Wettengel called and said that the 32A-60-I-8-VBE wheel was the ideally perfect wheel, but not the only wheel that would meet our needs. This is when we were given the general guidelines that appeared as an editor's note in the interview. He said he felt that with these guidelines, almost any Norton distributor could fill the order.

The Norton distributor in your area can be found by looking in the Yellow Pages of the phone book under Abrasives.

To our amazement, of all the major mail order catalogs that we checked, only Woodcraft Supply stocks any grinding wheels. When we tried to find out more specific information on the wheels they offer in their catalog, they said they didn't have any additional information available on that product. They did tell us that the wheels they offer are produced by Bay State Abrasives, but that's another article!

DRESSING STICKS. There was only one catalog that listed dressing sticks. Silicon carbide dressing sticks are available from: Woodcraft Supply (catalog No. 11N51-DW, $2.30), 313 Montvale Ave., Woburn, MA 01888.

TRUING (STAR) WHEELS. There were two mail order catalogs that list truing wheels, Woodcraft Supply (see address above), No. 03A11-BN, $9.75. And Garrett Wade (catalog No. 76M03.01, $5.10), 161 Avenue of the Americas, New York, N.Y. 10013. We also found a truing wheel at a local lumber yard, so they may be available locally.

SINGLE POINT DIAMONDS. The single point diamond that's used to true and dress the grinding wheel is nothing more than a steel rod with an industrial diamond embedded in the end. Again, there was only one catalog that listed these. They are listed in the Garrett Wade catalog (see address above) No. 04M03.01, $13.95.

SILICON CARBIDE SLURRY. As far as we can determine, there's only one source for silicon carbide slurry. It's a valve grinding compound used in the automotive industry for grinding the valve seats on engine heads. According to the manufacture, Permatex, the only place to purchase it is through a local auto parts store. They also mentioned that it may not be available at every auto parts store because it's not used very often. If it's not available at the auto parts store you check, they recommend you ask the parts store who their Permatex distributor is and contact him to locate someone in your area that carries it.

The valve grinding compound comes in only two sizes, 1½ oz. and 3 oz. In our area, the costs were $1.68 for 1½ oz. and $2.34 for 3 oz.

Sharpening Aids

GADGETS THAT GET THE POINT

LEATHER STROPPING PAD

One of the best ways to remove the wire edge (burr) from a chisel is with a leather stropping pad. I made my own stropping pad by gluing 3"x6" patches of leather to both sides of a wooden "paddle." (Leather scraps are available at any *Tandy* Leather store, or you can use an old belt.)

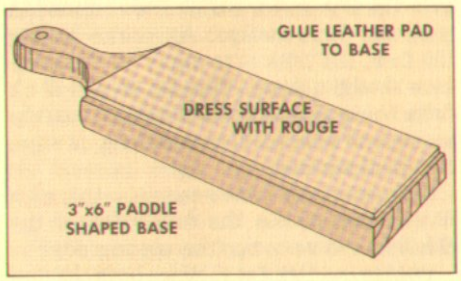

I smeared a little jeweler's rouge on one side to give the strop a little more "bite." The other side is just plain leather for final stropping. (Jeweler's rouge can usually be found at Lapidary supply stores; look in the Yellow Pages.)

IMPROVED TOOL REST

At the flick of a switch my *Sears* grinder starts whirling away — spinning the grinding wheel at 1725 RPM. But that's where its usefulness ends. If you've ever tried to adjust the tool rest on almost any grinder, you've come face to face with poor design.

Tool rests are supposed to provide a flat surface to hold a chisel at the angle you need for grinding. Granted, the tool rest on our *Sears* grinder is fully adjustable, and it's possible to set it at a 25° angle for grinding a chisel.

But . . . when it's set at that angle, you're forced to work on the trailing arc (bottom half) of the wheel where it's difficult to see what's going on. Also, at 25° the tool rest must be pivoted too far away from the grinding wheel to grind short (butt) chisels.

To solve this problem, I made a little modification. As shown in the drawing, I added an upright "arm" on each side of the grinder. These arms are cut from a 1"x10" mending plate, and then bolted into the holes (where the original tool rests were) with ¼"x1" carriage bolts.

SHOP NOTE. Mending plates are available at any hardware store. I used the 1"x10" length because it's a little thicker than the shorter ones. Also, since some of the predrilled holes on this plate are centered and some are off center, I cut two sections out of the plate, as shown, to get two "arms" that are mirror images of each other — so the holes are in the same position on both sides of the grinder.

Simply bolt the original tool rests to these arms, and this alone should solve most of the adjusting problems. When the tool rest is level (not tilted), it should be about 1" above the center point of the shaft for the grinding wheel. From there, you can pivot both the arm and the tool rest to get any angle you want, and still keep it close enough to the grinding wheel to be effective.

EVEN BETTER. This arrangement worked fine until I needed a larger (longer) support for the diamond point dresser holder (discussed below). So, I made some new tool rests with a pair of 4" corner irons (L-brackets).

I cut one "arm" of the corner iron short, and bolted it to the upright (mending plate) arm. Then I added a strip of ¾" plywood

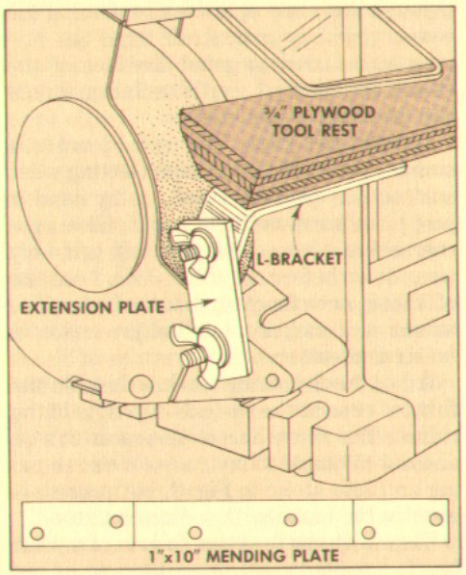

(beveled at 45° on the inside edge) to tie the two sides together.

This is the arrangement I like the best. It provides ample surface for wide chisels or plane irons. And, it can be positioned level to square the end of a chisel, or tilted down for the diamond point truing rod.

STONE BOX

The box I use for all of my stones is just an improvised version of the Cedar boxes that come with most Arkansas stones. The only change I made is the length of the bottom. I made the bottom about 4" longer than the stone to provide clamping "wings." These wings allow you to clamp the box to your workbench so it doesn't slide around as you're honing.

I made this stone box from ½" redwood. Cut a piece for the bottom 4" longer and 1" wider than the stone. Then cut the pieces for the sides and ends ¼" higher (wider) than the stone is thick.

Group the pieces around the stone to make sure they fit, and then cut a piece for the top. Glue everything together (remove

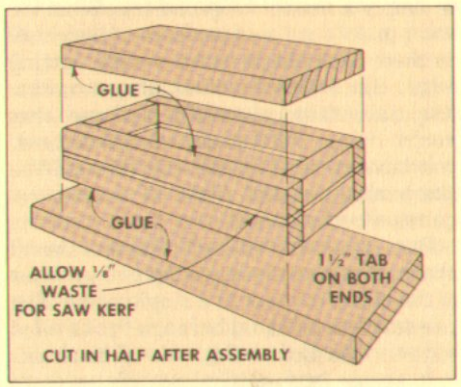

the stone before gluing). After the glue is dry, just cut the box in half (lengthways) to separate the top from the bottom. (This can be done as two rip cuts on a table saw, or in one cut on a band saw.)

DIAMOND POINT HOLDER

Diamond point truing rods are very nice for truing and dressing the face of a grinding wheel. However, it is difficult to move this rod in a straight smooth motion across the face of the grinding wheel.

I made a simple little block to hold this rod. The block is just a piece of 2x4 scrap trimmed down to 2" wide. I cut a ¼"x1" rabbet on the bottom to form a shoulder that rides against the tool rest.

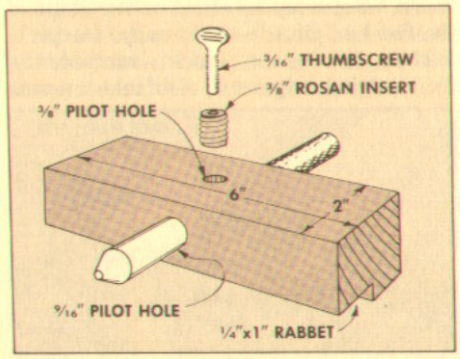

The rod is inserted through a hole in the block. Then, to keep it from slipping, I drilled another hole on top for a rosan (threaded) insert and thumb screw. (See page 12 for more on using a diamond point rod to dress grinding wheels.)

Sharpening Techniques

A REPORT FROM THE SHOP

No one would deny the necessity of sharp tools — a dull tool just doesn't cut it. Yet, the technique of sharpening seems to escape most of us. I suppose one reason is that "sharp" has an image of perfection. Almost sharp doesn't work. Absolutely sharp is what we're after . . . and that's not easy to attain.

The actual process of sharpening a chisel is simply a matter of geometry. What we want to do is get two surfaces of the chisel to meet at a single point — the cutting edge. Since this involves almost microscopic accuracy, you really can't see what you're doing, until you're done. Instead, you have to "feel" your way through the sharpening process. This, of course, requires a certain touch.

But, what is "sharp?" As mentioned above, it's a matter of getting two surfaces of the chisel to meet at a single point. The two surfaces involved here are the beveled edge and the face (or flat) side of the chisel.

It seems only natural at this point to launch into a discussion of grinding angles and honing angles. But no matter what you do to the beveled edge, you can never get a truly sharp chisel unless the face (flat) side of the chisel is smooth first.

HONING THE FACE

The face side of a chisel may look shiny and flat to the naked eye, but looks can be deceiving. Most new chisels are actually warped (either convex or concave). This is the result of the manufacturing process.

In order to get a good cutting edge, the steel must be tempered to a certain hardness. Since tempering involves heating and cooling, it not only changes the molecular structure of the steel so it becomes "hard," it also has an effect on the shape of the finished piece — it (usually) warps.

If the face of the chisel is warped, the final cutting edge will also take on this shape, see Fig. 1. Even if the chisel is flat to begin with, you'd still have to go through this same operation because of the coarse grinding marks left from the lapping stone used to grind the face of the chisel. So, the first step is to flatten (hone) the face side of the chisel.

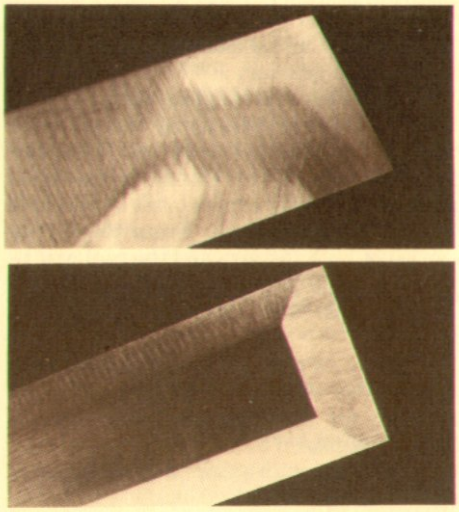

HONING THE FACE. The whole process is simple, but it's a lot of work. Getting a flat surface . . . on hard steel . . . by hand is just plain hard work. It can be done on a coarse *India* stone, but you will probably wear down before the chisel does. I use one of those new-fangled diamond abrasive stones — it makes the initial process a lot faster and easier.

All of the flattening work is done on the first ½" or so at the tip (cutting edge) of the chisel. The stone is positioned so it's at about a 45° angle to my body. (We're showing an *India* stone in Fig. 2, but process is exactly the same with a diamond stone.)

Then with the first two fingers of my left hand, I apply pressure on the end of the chisel. The rest of the chisel (hanging off the stone) is held *loosely* in my right hand. There should be enough pressure on the tip of the chisel so if you were to remove your right hand, the chisel would remain flat on the stone.

(Editor's Note: I'm right-handed, so these instructions are from that perspective.)

To hone the face, just move the chisel over the diamond or coarse *India* stone in a back-and-forth motion. As you're honing the face, the trick is to apply all the pressure straight down. That is, so you don't drive the leading edge of the chisel into the stone and create a beveled (or worse, rounded) surface.

You need only hone enough so there's a flat surface across the full width of the chisel at the very tip (the cutting edge).

POLISHING THE FACE. Since both the diamond or the coarse *India* stone leave a rough texture, I switch to a fine *India* stone first and then to a soft Arkansas stone to polish the face almost glass smooth.

RESULTS. The photo on the top shows the results of this flattening and honing operation. The L-shaped area near the tip of the chisel is the result of flattening a chisel with a concave warp on the face side. Also, you can see how the original grinding marks have been polished to a smooth surface.

GRINDING THE CLEARANCE ANGLE

In order for a chisel to do its job, the working end must be shaped to produce a cutting edge. The exact angle you choose depends to some extent on the size (width) of the chisel, plus a little on personal preference. At the very least, you have to grind some sort of clearance angle on the end of a chisel to form a "wedge."

CONSIDERATIONS. The angle of this wedge (the clearance angle) is a balance

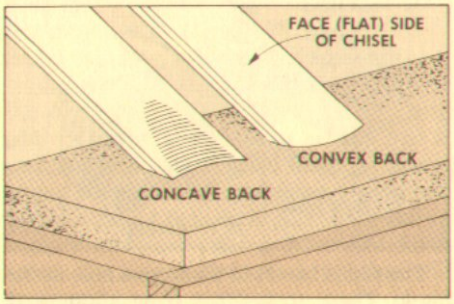

1 *If the face of the chisel is warped, it must be flattened across the full width at the tip. Also, the original grinding marks must be removed (smoothed).*

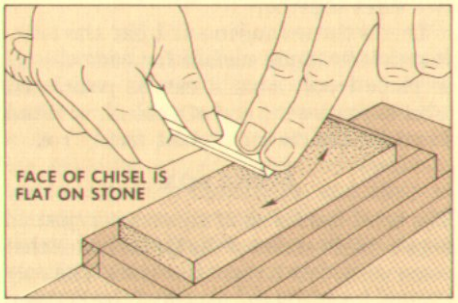

2 *To hone the face (flat) side, I hold the chisel loosely in my right hand. Then apply even pressure (almost straight down) with the fingers of my left hand.*

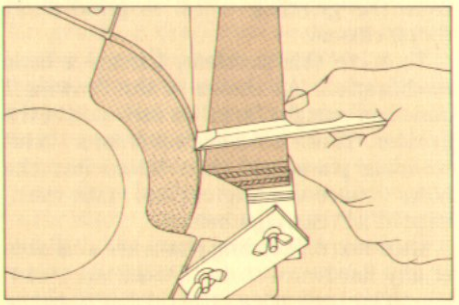

3 *Before grinding the bevel, the "front" edge must be exactly perpendicular to the sides. Move the chisel into the wheel very slowly, then check with a square.*

between removing enough steel so the cutting edge will actually slice through the wood, but not so much so the tip of the chisel is too thin (weak) to hold up under the shock of pounding it into the wood.

Although you can get very nit-picky about what precise angle to grind, I generally shoot for something around 25° to 30° — depending on what the chisel is being used for, and how wide it is.

The width of the chisel plays a part in determining the clearance angle because the wider the chisel, the greater the amount of total surface area that must be forced through the wood. (Since a chisel is really a wedge, you can see how much more surface area comes in contact with the wood as you go from a narrow to a wide chisel.)

For bench chisels or paring chisels that are less than ⅜" wide, I usually grind a 30° angle to give them a little more "meat" on the beveled edge. As the width of the chisel increases up to 1", I lower the grinding angle to 25° to 28°. On chisels over 1" wide this angle can be reduced to as little as 23°.

SQUARING THE END. So, now you're ready to grind the clearance angle. But before you put the chisel to the grinding wheel, stop. The "front" cutting edge must be exactly perpendicular to the sides of the chisel.

I check this with a small try square, and correct any variation by easing the cutting edge straight into the grinding wheel, Fig. 3. Don't overdo it. Just a slight bit of pressure will take off a lot of steel. Once the end is square you can proceed with grinding the clearance angle.

HOLLOW GRINDING

At this point, the end of the chisel is square and the face side is flat, but now you have another decision to make. The finished shape of this bevel can be either flat ground (that is, a flat surface from the tip to the heel of the bevel), or hollow-ground (slightly concave from tip to heel).

Most new chisels come from the manufacturer with a flat ground bevel. There are (rather expensive) grinding machines on the market that allow you to grind on a flat, rotating stone that produces a flat bevel. Also, you can get a flat bevel by using one of those small belt sander stands.

Caution: Although it's tempting to grind a flat bevel on the "side" of a grinding wheel, it's not a good idea unless the wheel and the grinder are specifically designed for this type of grinding.

The second choice — hollow-grinding — is the natural result of grinding done on the face (perimeter) of a round grinding wheel. As the bevel is ground, it takes on the shape of the curve of the wheel and becomes concave or hollow-ground, Fig. 4.

Okay, let's say you've got an electric grinder, the grinding wheel is dressed and trued (see page 12), and you're ready to hollow-grind a new bevel on your most expensive chisel.

HOLLOW-GRINDING. To hollow-grind a bevel on an electric grinder, adjust the tool rest as close as you can to the angle you want. This in itself can be a real hassle on most grinders. To help set and keep the angle I want, I use the grinding stand arrangement shown on page 7. (I suppose if you're really good you can free-hand it, but I'm not that good.)

I grip the chisel near the cutting edge with my right hand, using my right index finger as a kind of stop against the tool rest of the grinder. Then I push the chisel across the full width of the wheel with my left thumb, Fig. 5.

CHECKING THE ANGLE. Ease the chisel into the wheel, but make only one pass to begin with. Then flip it over to see if you have the grinding (clearance) angle you want.

If you want to keep the same angle that's already on the chisel, the grinding marks should be centered between the tip and the heel. If you want to increase the angle, the grinding marks should be more toward the tip (cutting edge); and to decrease the angle, the marks should be more toward the heel of the bevel.

This procedure gives kind of a "ball park" angle. For more accuracy, I take a few more passes over the wheel and check the angle with a protractor, Fig. 6. (I bought this protractor at *Sears*. Several woodworking catalogs also carry them.)

CHECKING THE PROGRESS. Once you've got the right angle, it's just a matter of letting the wheel do its job. Grinding should be done in a smooth even motion across the face (perimeter) of the grinding wheel. After two or three passes, check the progress of the grinder marks, and make sure the chisel doesn't get too hot.

I usually make three or four passes across the wheel at a time — using a slow count to 4 to judge the length of time the chisel is in contact with the wheel. Then dip the end of the chisel in some water to cool it off.

You should be able to touch the end of the chisel now without burning your fingers. This is a nervous moment at first until you get used to how hot the chisel gets, how long it takes to get that hot, and how quickly it cools down.

Whenever the chisel is removed to cool it in water, or to check the progress of the grinding, keep your right index finger in the same position on the chisel so it can be addressed to the wheel at exactly the same spot each time.

Unless you're changing the entire angle, you don't have to grind all the way to the tip. I usually stop a little short. As you get closer and closer to the tip, the bevel gets thinner and thinner, and it's very easy to over-heat.

PROBLEMS. Occasionally, things don't go exactly according to plan. As you're grinding away, all of a sudden the tip of the chisel turns blue. Stop. You've gone too far. The blue color indicates that the temper of the steel has been "drawn." When steel turns a blue color, it has softened to the point that it will no longer hold a sharp edge.

This over-heating can happen very quickly, and the culprit is usually "glazing" on the wheel. Stop and dress the wheel to remove all signs of glazing. Then continue grinding until the blue steel is removed.

As shown in the bottom photo, the result of this effort and care should be a hollow-ground bevel, with even grinding marks across its width — a beautiful sight.

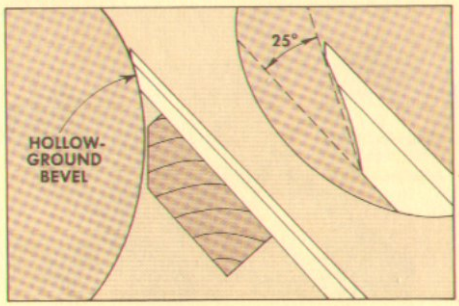

4 *When grinding on the face (perimeter) of a grinding wheel, the beveled edge will be hollow-ground (concave), but the final angle is measured from tip to heel.*

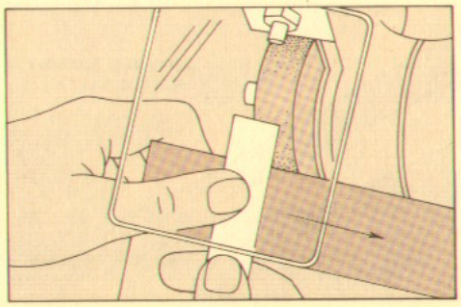

5 *I slide the chisel across the wheel with my left thumb, using my right index finger as a stop against the tool rest. After 3 or 4 passes, dip it in water to cool it.*

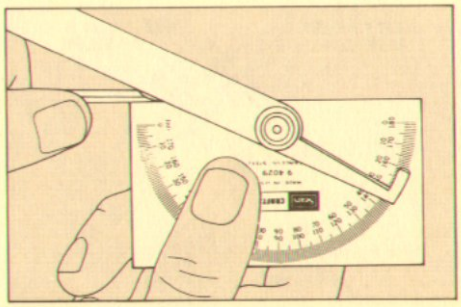

6 *To accurately check the grinding angle, I use a swivel protractor. Depending on the width of the chisel, the angle can be anywhere from 25° to 30°.*

Now comes the fun part — sharpening the very tip of the chisel to produce a razor-sharp cutting edge. For me, sharpening is a two-step process. First, the very tip of the chisel is honed to the cutting angle. Then I "polish" this edge to razor sharpness.

Before getting to the business of angles, there are two things to consider: 1) selecting the right stones to get the edge you want, and 2) holding the chisel in such a manner to get the angle you want.

THE STONES

As far as the choice of stones is concerned, I like to use a fine *India* and a soft Arkansas. I start out with a fine *India* (aluminum oxide) stone to hone the cutting edge. Then, I take it one step further and "polish" the edge on a soft Arkansas stone.

Why these two stones? For a long time I kept buying different stones, switching around to find the exact stones that would produce the finest edge. What I discovered is: you can spend a lot of money on stones . . . and get very confused in the process.

I also discovered that I kept coming back to the fine *India* and the soft Arkansas stones most of the time. So, I gave up my pursuit of the "perfect" stones and decided these two stones produce the edge I want (and that's the whole point of sharpening).

HOLDING THE CHISEL

No matter what stone you use, the real problem is holding the chisel so you can sharpen it to the angle you want. There are a lot of gizmos on the market designed to hold chisels at the proper angle for honing.

I've tried some of them, but I always go back to the little gadets attached to the end of my hand. Finger-tip control takes a little getting used to, but once you acquire the "touch," it's very rewarding work.

Most of the instructions I've seen say that you should hold the chisel so the cutting edge (the "front" edge of the chisel) is at a right angle to the long edge of the stone. Then the chisel is moved straight forward and back, or in a figure 8, or in a circular motion.

ANATOMY OF SHARPENING. The way I hold the chisel has a lot to do with the anatomy of my arm. Simply, an arm consists of three major joints: shoulder, elbow, and wrist. Any movement involving your arm requires movement of at least one of these joints.

To illustrate, take a pencil in your hand and move it straight out and straight back in a horizontal line away from and back to your body. Notice that you're using two joints — the elbow and the shoulder (your wrist is probably locked). Both joints must be moving in perfect harmony to keep the pencil level. If they're not, you can see how easy it is to create a rocking motion.

Now move the pencil in a figure 8 or in a circle. Here both your wrist and elbow are locked and all the movement is coming from your shoulder — the joint farthest from the point of the pencil. Not only is this difficult to do with any consistency, but the same rocking motion can easily happen.

Now hold the top part of your arm close against your side, and raise your forearm so it's 90° (straight out) from your waist. Lock your shoulder and your wrist and move the pencil from left to right by swiveling at your elbow (like a dog wagging his tail when he's happy).

This is the arm motion I like the best. I can lock my wrist to hold the angle I want, and there's little danger of rounding the edge because of the natural horizontal movement of the forearm pivoting on the elbow joint, Fig. 7.

PLACEMENT OF STONE. In addition to anatomy, four other things seem to help a great deal when honing. First, I mount the stone in a box that's designed so it can be clamped to my workbench to keep it from sliding around. (See page 7).

Second, I try to position the stone at about a 45° angle to my body, see Fig. 7. This angle seems to follow the natural arc of my arm.

Third, I position the stone so it's about 2" above my waistline. (This height seems comfortable to me and allows sufficient pressure on the tip of the chisel.)

And finally, I seem to have more control over the motion of my arm if my head is almost directly over the stone — so I'm looking straight down on the action.

HONING THE EDGE

Now you're ready to hone the cutting edge. Basically you have two choices: you can hone the cutting bevel at the same angle as the grinding bevel, or you can hone a double bevel (micro-bevel). Either way, the process is very similar.

Since I'm right-handed, I hold the chisel in my right hand with my right index finger all the way on the tip of the chisel. Then I rock the hollow-ground bevel back and forth until both the heel and tip are flat on the stone, Fig. 8.

If you want the cutting bevel to be the same as the grinding bevel, just leave the chisel in this position and start to hone. This angle requires a little more work because two points (the tip and the heel) are being honed. It also means you'll have to grind a new bevel much sooner.

I like to hone a micro-bevel (or double bevel) at a slightly steeper angle than the grinding bevel. To do this, first get both the heel and tip firmly on the stone. Then raise the heel just a smidgen. (I've read you're supposed to raise it 5°, but that's very difficult to judge. I just raise it slightly, whatever feels right.)

With my little finger and ring finger wrapped under the chisel, I raise the chisel to the angle for the micro-bevel, Fig. 9. The handle of the chisel usually comes up to rest against the underside of my forearm (which adds a little more stability).

Now that I've got the angle, I lock my wrist. The only pressure on the chisel is from my right index finger. All other fingers of my right hand (and my hand itself), are relaxed. In effect, my right hand is just a "gadget" to hold the chisel at the angle I want.

All of the real work of honing is done with my left hand. Depending on how wide the chisel is, I use the index finger of my left hand, or the index plus middle finger, to apply pressure directly to the very tip of the chisel. (Sometimes my finger tips are actually touching the stone.) Then I push the chisel across the stone to hone the micro-bevel. Fig. 9.

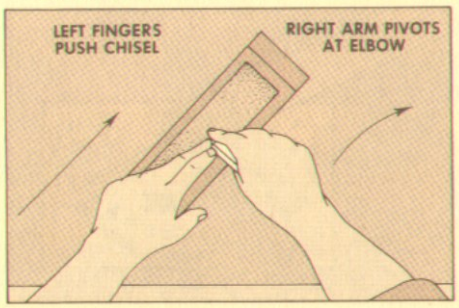

7 *For me, the most natural motion for honing is to hold the chisel loosely in my right hand, with wrist locked, and right arm pivoting at my elbow in a small arc.*

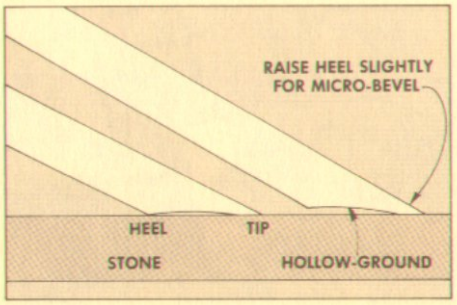

8 *To hone the hollow-ground bevel, rock the chisel until it's resting flat on the tip and heel. If you want a double (micro) bevel, raise the heel slightly.*

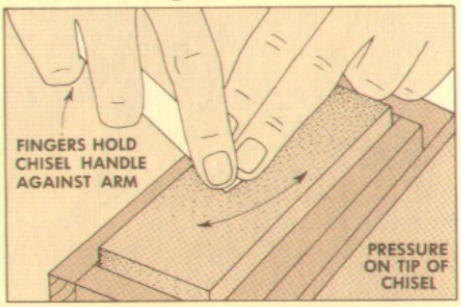

9 *All pressure should be on the very tip of the chisel — moving chisel in small arc. Fingers of my right hand support the handle against my forearm.*

CHECK FOR BURR

After taking 6 to 8 strokes on the fine *India* stone, I check for a burr. A burr, or wire edge, is the first indication that the chisel is sharp.

As you hone, you reach a point where the two surfaces of the chisel (the micro-bevel and the face side) meet at a very fine line. With just a tiny bit more honing this line actually becomes too thin, and starts to peel back and break off — forming the burr or wire edge. When you feel this burr, stop — you've gone as far as you need to go with honing.

As I remove the chisel from the stone to check for the burr, I try to keep the fingers of my right hand in exactly the same position — moving only my right index finger just enough to get it out of the way. Then I use the "pad" of my left index finger to feel for the burr. (The "pad" is that soft sensitive area just below the last knuckle of your finger, see Fig. 10.)

As you feel for the burr, don't move your finger *across* the cutting edge. Instead, place the pad on the flat side of the chisel and pull it off the end (parallel to the length of the chisel). It's amazing how sensitive the pad of your finger is. You'll be able to feel even the slightest burr. Once I feel an *even* burr across the full width of the chisel, the honing is done.

REMOVING THE WIRE EDGE. Although it's not entirely necessary, I remove this burr before switching to the soft Arkansas stone. Place the flat side of the chisel on the stone and pull it toward you. One or two strokes should snap off the burr, and bend some remaining fragments over to the bevel side.

POLISHING THE MICRO-BEVEL

Honing on a fine *India* stone will produce a fairly smooth edge that can be used for rough work. But I usually take it one step further and polish the micro-bevel on a soft Arkansas stone.

The process here is exactly the same as on the *India* stone, but this is where the "touch" comes into play. Since the micro-bevel is so small, it's almost impossible to

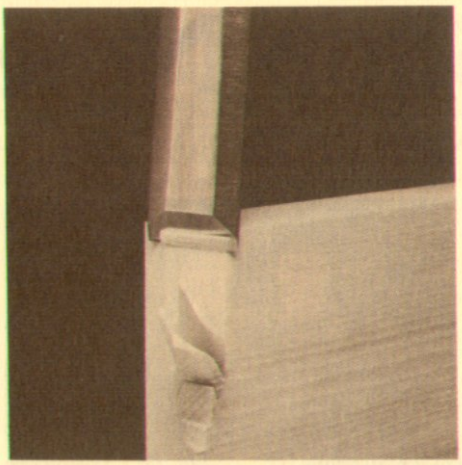

find exactly the same angle. You just have to feel your way to it.

Polishing on a soft Arkansas stone should take only a few strokes. Then check for the wire edge. If you feel one, stop. That's as far as you have to go. Now, remove the wire edge as before.

STROPPING THE EDGE

Back in the days when there were barbers (now they're called "hair stylists"), he would dress his razor on a leather strop before he cut off your ear. This type of stropping operation is also excellent for producing an incredibly keen edge on a chisel.

I use a 3"x6" leather pad mounted on a small board to remove the last tiny fragments of the wire edge, Fig. 11. Although the leather pad can be used "as is," I rub a little jeweler's rouge on it to give it a little more "bite." The rouge has just enough very fine abrasive in it to put an extremely fine edge on the chisel.

First, I hold the face (flat) side of the chisel on the leather pad with the cutting edge pointing away from me. Then I pull the face of the chisel over the leather pad to scrape off the wire edge. Two or three strokes should be enough.

Then I work on the beveled edge. Finding the exact bevel angle on a leather pad can be a little tricky. But I don't worry about it. In fact, I raise the chisel just a little higher than the cutting angle (micro-bevel) to make sure I clean off all the fragments of the wire edge.

FINAL THOUGHTS. The whole purpose of all this work is to sharpen a chisel so you can *use* it. Of course, using a chisel dulls the edge, and you're faced with the task (fun) of sharpening once again.

However, unless you use the chisel to pry out nails, you won't have to re-grind a new bevel. It's usually just a matter of touching-up the edge with a few strokes on the fine *India*, then polishing on the soft Arkansas, and stropping. The whole process can be done in less than two minutes.

CHECKING THE SHARPNESS

Now you have a razor-sharp chisel. Well, maybe yes, maybe no. There are a couple of ways to check exactly how sharp the edge really is. You can shave some of the hair off your forearm. Or you can drag the edge of the chisel over your finger nail — if it slides easily, the chisel is not sharp; if it "sticks" it's sharp.

I'm sure that just reading about these two methods is enough to send shivers up and down your spine. It's even worse when you actually do it.

The way I check for sharpness doesn't require the loss of any part of my anatomy. Faint-hearted soul that I am, I take the chisel and pare (slice) down on the end grain of a piece of pine . . . with hand pressure only, Fig. 12.

This method of testing for sharpness actually tells you two things about the sharpness of the chisel. First, if the end grain is ragged, the chisel is simply not sharp enough to slice through the fibers of the wood, it's just tearing them. So it's back to the stones to get it really sharp.

If the surface is fairly smooth but there are little scratches on the end grain, it means there are tiny fragments of the wire edge left on the cutting edge. More polishing or stropping is needed.

But . . . if you can slice through the end grain like a hot knife through butter, and the result is a glass-smooth surface, you know the chisel is absolutely razor sharp. And that's pure joy.

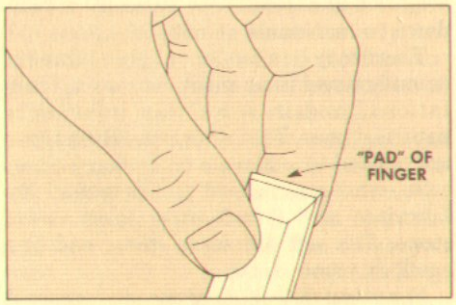

10 *To test for burr (wire edge), use the "pad" of index finger, pulling finger parallel to the length of the chisel. When you feel an even burr, the honing is done.*

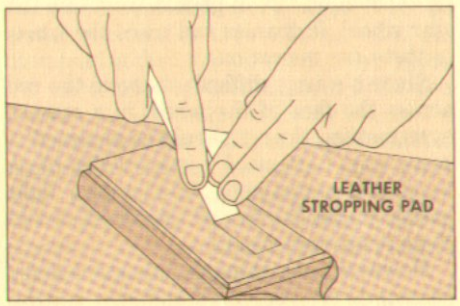

11 *To remove the last fragments of the burr, strop chisel on leather pad. For more "bite" use jeweler's rouge. Only 2 or 3 strokes on each side are needed.*

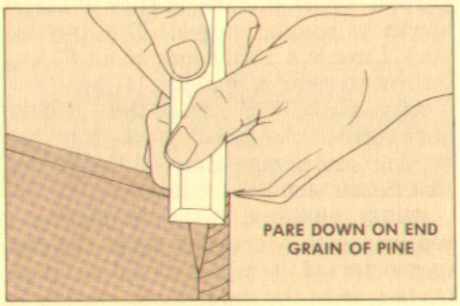

12 *You should be able to slice down on the end grain of pine with hand pressure only. If chisel is truly sharp, the end grain will be as smooth as glass.*

Shop Notes

SOME TIPS FROM OUR SHOP

In the previous articles in this issue, I've mentioned most of the equipment we use to sharpen chisels in our shop. But I thought I'd take this chance to give a summary of the wheels and stones we use and how we keep them in shape.

GRINDING WHEELS

A few years ago I bought a *Sears* grinder (on sale, of course) to sharpen some of my chisels. When I finally got up enough courage to use it, I wound up with frayed nerves, blue-tipped chisels, and an expanded vocabulary.

The problem, I thought, must be the motor. At 1725 RPM the motor simply turns the grinding wheel too fast, and in the process burns up my chisels. A very gentle touch must be required, I reasoned.

Still I had problems. No matter how careful or how gentle I was, the end of the chisel quickly burned (turned blue). After a little experimenting, I finally discovered the real culprit. The 60-grit all-purpose grinding wheel that came with the *Sears* grinder was "glazing" very quickly.

When a steel chisel is pushed against a grinding wheel, tiny particles of steel are chipped off. Some of these particles are hot enough to burn (the sparks). But other particles become embedded in the surface of the grinding wheel. As the wheel fills with these particles, it becomes "glazed."

When a grinding wheel is glazed, the chisel no longer comes in contact with as many of the abrasive particles in the wheel. Instead, you get steel-to-steel friction. This friction can generate a lot of heat, quickly. And results in burning the tip of the chisel. To solve this problem, the glazing must be removed. This is where dressing sticks enter the scene.

DRESSING STICKS. These sticks are silicon carbide blocks used to clean the glazing off grinding wheels. If you use an all-purpose wheel, a dressing stick is almost worth its weight in gold. The dressing stick I use is a 1"x1" block about 6" long (shown on right in photo).

All you have to do is press the end of the stick against the grinding wheel (as it's turning) and scrape away all the glazing that causes so much trouble.

WHEEL DRESSER. After the glazing is removed with a dressing stick, the face (perimeter) of the wheel should be trued. (In fact, even the good wheels need to be trued from time to time.) Truing does two things: 1) the face of the wheel is squared across its width, and 2) the high spots are knocked off so you have a true circle.

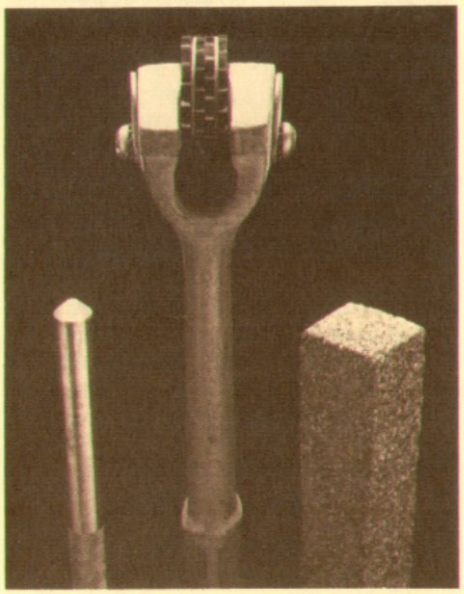

The old-fashioned way of doing this is with a truing wheel, sometimes called a "star wheel." This is just a heavy iron handle with several steel cutters ("stars") that chip off the perimeter of the wheel (shown in middle in photo).

A star wheel is nice to use (in some ways) because it both trues and dresses the grinding wheel at the same time (thus eliminating the need for a dressing stick). But I always feel a little nervous when using a star wheel because it makes such a horrible sound.

Before we got the diamond point dresser (discussed below), I used a dressing stick most of the time to keep the grinding wheel clean, and resorted to the star wheel only when it was absolutely necessary.

DIAMOND POINT DRESSER. The modern replacement for the star wheel is a diamond point dressing rod. This is a steel rod with an industrial diamond mounted in the tip (shown on left in photo). Just like the star wheel, it dresses and trues the wheel in the same operation.

Since it's very difficult to move the rod across the face of the wheel in a smooth even motion, the rod should be mounted in some way. I mounted it in a wooden block — shown on page 7. One or two light passes across the face of the wheel should clean it up very nicely.

However, one thing is important here. Diamonds are very hard and very brittle. Whenever a diamond point dressing rod is used, the point must be pointed down — on the trailing arc of the wheel.

EDITOR'S NOTE: When using any of these tools to dress or true a grinding wheel, you should wear eye goggles and a face mask. Sources for all of these tools are listed in the last section of the interview with the Norton Co., page 6.

THE RIGHT WHEEL

It wasn't until we talked to the people at the Norton Co. that I learned how much difference there is between one grinding wheel and another.

They suggested we try a 60-grit *Norton* 32A (aluminum oxide) grinding wheel to sharpen chisels. So we got one and I tested it out. After grinding only one chisel I quickly discovered that the *Norton* wheel seems to cut (grind) the steel much easier, and it cuts much, much cooler. In fact, it's almost impossible to "burn" the chisel — even if you try.

Also, the *Norton* wheel doesn't "glaze" as easily as the *Sears* all-purpose wheel, because it's designed to "break away" as you're grinding hard steel. This in itself eliminates 90% of the problems of the all-purpose wheel.

We also tested two other wheels: a *Norton* 60-grit 38A, and a 60-grit aluminum oxide wheel from *Woodcraft* Supply (Cat. No. 11N21-DW, $20.00ppd) made by *Bay State Abrasives*. Both of these wheels are made of a very high grade (almost pure white) aluminum oxide, and both are excellent for grinding chisels. The major drawback to all these wheels is their cost: about $20 to $30 each.

Of the three wheels we tried, I tended to prefer the *Norton* 38A (38A-60-J-5-VBE). It seemed to give a finer cut (producing smoother grinder marks), and was simply pure joy to use.

THE STONES WE USE

When you get down to the real nitty-gritty of sharpening — the use of stones — there are a lot of choices. But basically it boils down to man-made or natural stones.

There may be a tendency here to think of manufactured (man-made) stones as "imitations" and in some way inferior to natural stones. That's not true. Both types are needed to achieve a truly sharp edge.

So, what are the best stones to use? My favorites are: 1) a *Norton* combination stone, 2) a soft Arkansas stone, and 3) a small diamond stone.

For about 90% of all of the sharpening I do, I only use the *Norton* combination and the soft Arkansas. But the diamond stone is nice to have when you really need to "hog" off some metal.

NORTON STONES. As far as bench stones are concerned, you have two basic choices: aluminum oxide and silicon carbide. Since most of these stones are made by the Norton Co., they're usually called by their trade names: *India* (aluminum oxide) and *Crystolyn* (silicon carbide).

Both types come in three grits (fine, medium and coarse), as well as a variety of shapes and sizes. The one I use the most is a 2"x8" *India* (aluminum oxide) combination: fine on one side and coarse on the other. This combination stone offers the most for your money, and the most flexibility.

SOFT ARKANSAS. To get a truly keen edge on a chisel, Arkansas stones are the ones to use. These stones are actually chunks of novaculite quarried from a range near Hot Springs, Arkansas. They come in four grades (grits): Washita, soft, hard, and black hard (or surgical).

The soft Arkansas is the one I use the most. It's a good finishing stone and will put a very keen edge on a chisel — an edge that will hold up under use. I can't really see much point to using the hard or black hard Arkansas stones unless you're sharpening carving tools.

DIAMOND STONES. Just a couple of years ago a new kind of "stone" came on the market: a diamond stone. These stones have a hard plastic base to which a nickel plate is bonded. The nickel plate is impregnated with diamond dust.

To be honest, I've just started to use these stones. But my initial reaction is that they're going to be a very good addition to the shop.

Diamond stones have two big advantages over the other (traditional) stones mentioned above. First, they're flat and they stay flat (which makes them nice for flattening the backs of chisels and plane irons). Second, they don't clog up or "glaze" like the other stones — just wash them off with a little water and they're ready to go again.

There are also two disadvantages. First, it should be no surprise that diamond stones are a little on the expensive side: $14 for a small 1"wide by 4" long stone, and $36 for a 2" wide by 6" long bench stone. Second, right now they come in only two grits: coarse and fine. Even the fine diamond stone won't give quite the edge that a fine *India* or soft Arkansas will.

If you want to try them out, you can order direct from the manufacturer: Diamond Machining Technology, Inc., 34 Tower St., Hudson, MA 01749. (Send the amount listed above for the stone you want, plus $2 for postage and handling. Also, include grit size: fine or coarse.)

EDITOR'S NOTE. We're going to keep working with these diamond stones and give a more complete report in a future issue.

CARING FOR AND CLEANING STONES

No matter what kind of stone you have, it's an investment that needs some care and attention from time to time.

The kindest thing you can do for either the *Norton* or Arkansas stones is use some kind of lubricant to carry away the fine particles of steel created during honing.

A lot of woodworkers come up with their own concoctions for use on a stone. I just use *Norton* oil (mostly because it comes in a handy little squirt can).

As you use a stone, you'll see the oil turn black as it picks up tiny fragments of steel from the chisel. Some of these fragments remain suspended in the oil. That's good. The dirty oil can simply be wiped away.

However, some of these particles filter down into the pores of the stone, and it becomes glazed just like a grinding wheel. That's bad.

Once the stone becomes glazed, you might as well be waving the chisel through thin air because the glazing (steel particles) prevent the chisel from coming in contact with the abrasive particles.

A lot of this glazing problem can be prevented by applying enough oil as you're honing, and wiping it off as soon as it becomes black (filled with steel particles).

CLEANING STONES. After some amount of use, you'll probably notice the stone becoming dark grey or black as more and more steel particles filter through the oil and imbed themselves in the pores of the stone. Two things can be done to clean it.

One of the easiest ways to clean a stone is simply to apply a little oil and rub the surface with your finger tips. This light scrubbing will pick up a lot of steel particles, which then can be wiped away.

After I give a stone a pretty good workout, I scrub the surface with a mild soap (dish detergent) and a small wire (brass) brush. The soap cleans off the oil and any dust that's settled in the pores of the stone. The wire brush helps clean off some of the larger steel particles stuck to the surface of the stone.

FLATTENING A STONE. Besides being clean, a stone must also be flat to be useful. Once it becomes dished or gouged, it can be a real problem to true (flatten out). As discussed in the interview with the Norton Co. we've tried several methods to flatten stones . . . with only moderate success.

The method Pat Cullin of the Norton Co. suggested (lapping the stone on a steel plate with silicon carbide slurry) sounds like a good one. But we haven't had a chance to try it yet because we can't locate a good, flat, smooth iron plate.

As a "stop-gap" measure, one method we have tried is to lap the stone on a sheet of sandpaper. I use a sheet of 50-grit aluminum oxide sandpaper "glued" to a piece of plate glass with some spray adhesive.

After using the 50-grit sandpaper, I lap the stone on a sheet of 180-grit silicon carbide paper to smooth out some of the coarseness the 50-grit paper leaves.

This method won't work on a badly dished stone, but it does help remove some minor scratches and dishing. However, it does a good job of removing some of the "glazing" and most of the steel particles that are smashed into the surface of the stone.

ROUTING CIRCLES

Occasionally, we do things other than sharpen chisels. The main project in this issue is a buffet table with two half-circle leaves. One of the easiest ways to cut a large circle for a table top like this is with a router and trammel point attachment.

A few months ago we purchased one of the new *Sears* edge guides (which has a trammel point attachment). It's a nice little gizmo, but it won't rout circles beyond 24" in diameter. So, we had to make a small modification on it.

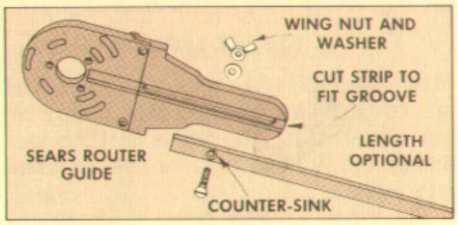

As shown in the drawing above, we simply added a long strip of wood to fit in the channel of the *Sears* edge guide. This strip is fastened to the edge guide with a flat-head stove bolt. With this additional arm, you can rout a circle of almost unlimited diameter.

READER'S TIP If you have the older version of the *Sears* trammel point attachment, we ran a tip from a reader for modifying it to rout large circles in *Woodsmith* No. 19. This involved using two 36"-long steel rods to replace the original rods that come with the attachment.

HOME-MADE VERSION Since not everyone has a *Sears* router or either of the trammel point attachments, we came up with a very simple jig that works on any router. All you have to do is cut a frying pan-shaped piece of ¼" plywood to fit the

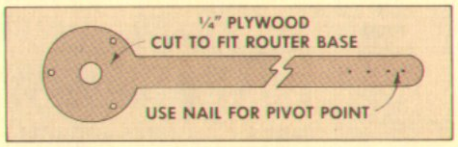

base of your router. Then remove the plastic base and use it was a template to mark the mounting holes and center collet hole on the plywood strip.

Along the "pan-handle" drill a hole at the radius you need for the circle, and use a finishing nail as a pivot point for this trammel jig.

Buffet Table

A TABLE WITH SIX LEGS

Versatility . . . that's the key to this buffet table. When both leaves are down, this table is less than 14" wide — narrow enough to fit in any hallway. And with both leaves up it provides enough space for all the dishes of a Thanksgiving dinner.

This buffet table is actually a modification of a gate-leg table. On a typical gate-leg table, an entire leg unit swings out to support the leaves. But we designed this table with leg units that pivot from the center of the aprons — on wooden hinges, no less.

The table shown here is made of cherry — solid cherry for the legs and aprons, cherry plywood for the top. Basically, the construction procedure can be broken down into two (large) steps: the base and the top. I started with the base (legs).

THE SIX LEGS

Most tables have four legs . . . this one has six, two of which are moveable. Before we get into cutting the joints for the legs and aprons, it helps to know how these six legs work.

The three drawings below show the two kinds of leg arrangements we're dealing with. Figure 1 shows one of the double-thick legs that are at two corners of the table. Figure 2 shows the split legs at the other two corners: an inside leg that's stationary, and an outside leg that's moveable (it swings open to support the leaf). Figure 3 shows the pivoting action of the swing legs pivoting on the split apron.

If all of this looks confusing, don't worry, it gets worse.

In order to make the six legs for this table, start with eight pieces cut from 5/4 stock (1 1/16" thick actual), 2 1/4" wide and 29" long to begin with.

THE DOUBLE LEGS. Two of these rough sticks are glued together to form a solid double leg. You need two legs like this. Once the glue is dry, trim (rip) these legs to the final dimensions of 2 1/8" square by 28 1/4" long.

Now you have to cut a whole series of mortises on the inside two faces of the legs. (To avoid confusion, I marked the inside faces with Xs and wrote "top" and "bottom" on each leg.)

MORTISES ON DOUBLE LEGS. Starting at the top of the double legs (refer to Fig. 4a), there are two sets of twin mortises for the drawer rails (above and below the drawers). These are all 1/4" wide and 1/2" deep, with a 3/8" shoulder between them. (The shaded area on the drawing indicates the position of the rail when it's attached.)

On the other face of the double leg there's a single mortise, slightly off center (to the inside) for the full-length inside apron. (This mortise is off center to allow room for the hinge apron. To get an idea of how all this fits together, see Fig. 1.)

The mortises on the bottom ends of the two double legs are very similar — twin mortises on one face and a single (off center) mortise on the other face, Fig. 5a.

SPLIT LEGS. Now there are four more legs to cut: two stationary legs and two swing legs. (Refer to Fig. 2.) These legs start out 1 1/16" x 2 1/8" - 28 1/4".

The mortises on the two stationary legs are cut in exactly the same position as those on the double legs, see Figs. 4c and 5c. The swing legs are even easier, there's only one mortise at the top and one at the

FIGURE 1

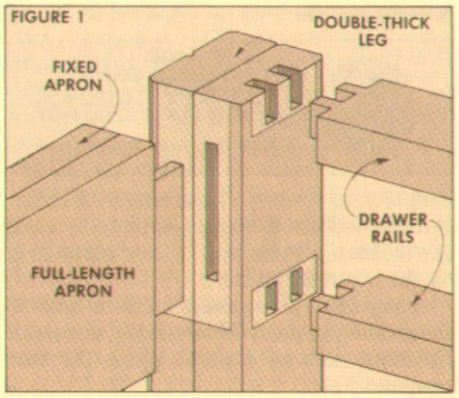

FIGURE 2

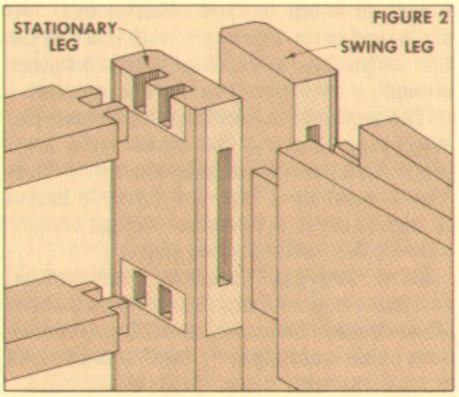

FIGURE 3

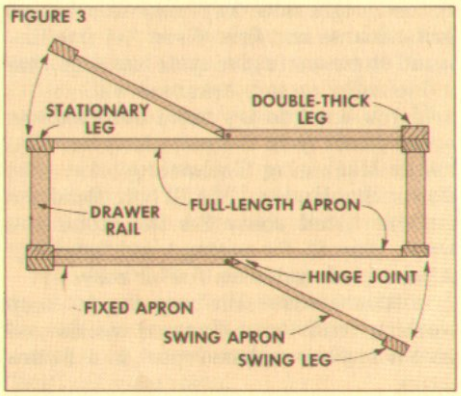

bottom, Figs. 4b and 5b.

CHAMFERING THE LEGS. After all the mortises are cut on all six legs, I chamfered off the outside edges, and cut V-grooves down the center, see Fig. 8.

THE APRONS AND STRETCHERS

These legs are joined with a whole bunch of aprons, stretchers and rails — some of which are full-length, some are split. Refer to Figure 3 again. A full-length apron is used to join one of the double-thick legs to one of the single stationary legs. Then there's a split (hinged) apron glued to the front of this full-length apron. The easiest way to go about cutting these aprons is to work on only the full-length pieces first.

APRONS AND STRETCHERS.. There are two full-length aprons at the top of the legs. (These are the "inside" aprons shown in Fig. 3.) Each apron has 1"-long tenons at both ends and a shoulder to shoulder measurement of 26¾", Fig. 6a.

At the bottom of each leg there are full-length stretchers. These stretchers must have the same shoulder to shoulder measurement as the solid aprons, but the tenons are only ½" long, Fig. 6c. All the edges of these stretchers are chamfered just like the legs, Fig. 9.

Once the full-length aprons and stretchers are finished, you can start gluing things together to form two "frames." Each frame consists of one double leg, one single stationary leg, one full-length apron, and one full-length stretcher. We'll ignore the split aprons and stretchers for now and move on to the rails.

THE RAILS. Now you need four drawer rails — to fit above and below the drawers at both ends of the table. All four drawer rails are the same: 6¾" shoulder to shoulder, with ½"-long twin tenons, Fig. 7a.

Below these drawer rails (at the bottom of the legs) are two double-thick stretchers. Both of these stretchers are glued up — two pieces thick (just like the double legs). They're also joined to the legs with twin tenons, Fig. 7b.

When the four rails and two stretchers are cut, they're used to join together the two "frame" assemblies. However, don't glue them together yet, just dry-assemble everything.

SWING APRONS

At this point you should have something that looks like a base for a table — four legs joined with aprons, stretchers, and rails. All that's missing are the split aprons that join the swing legs to the rest of the table.

The split aprons are literally split in half. One half of this apron (the fixed half) is glued to the face of the solid apron. The second (swing) half is joined to the first half with a knuckle (hinge) joint, and then, at the other end, it's joined to the swing leg with a 1"-long tenon, Fig. 10. This second

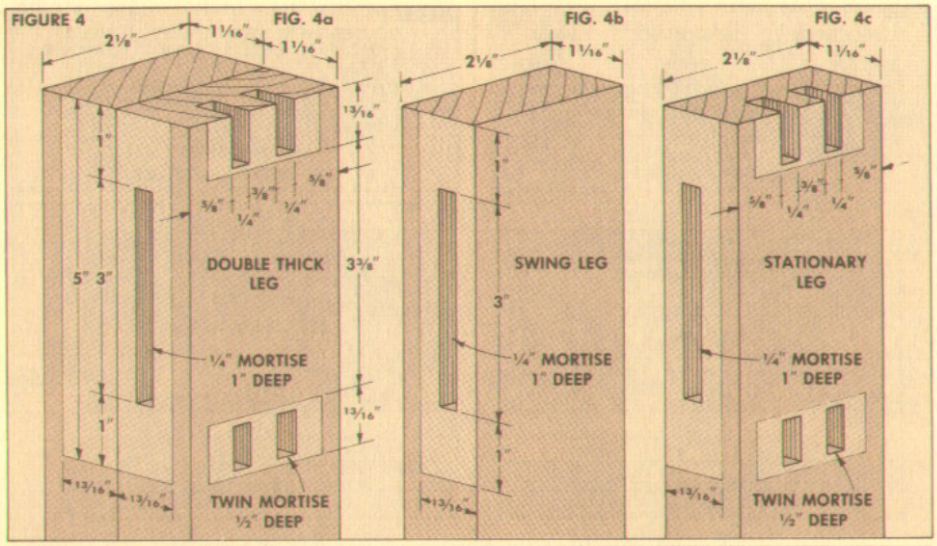

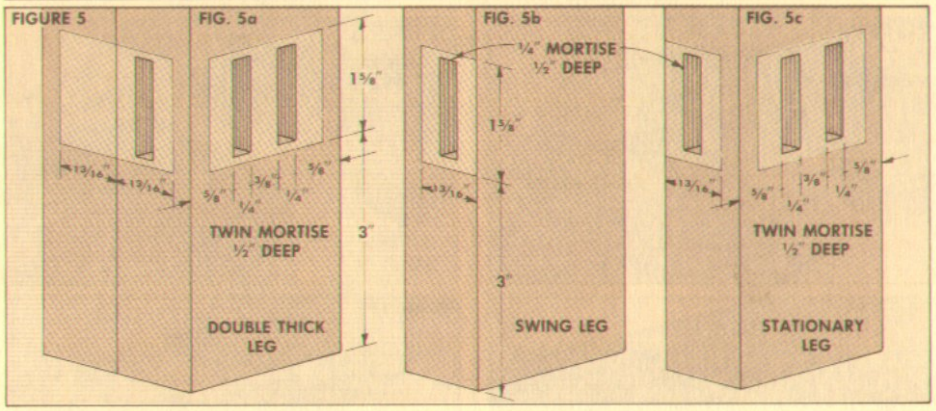

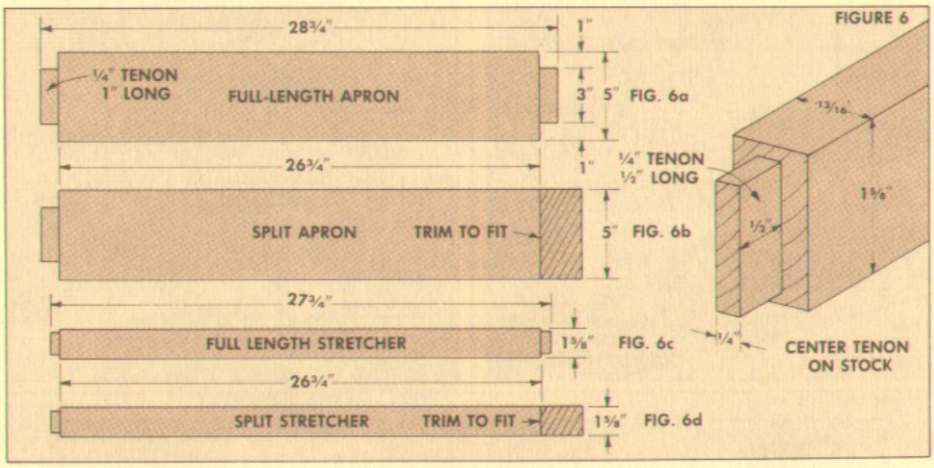

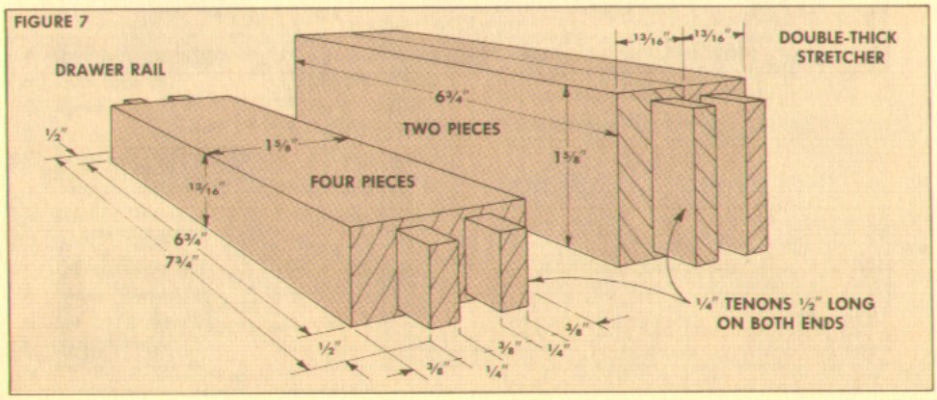

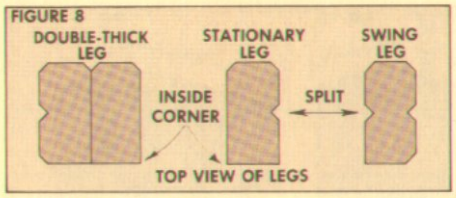

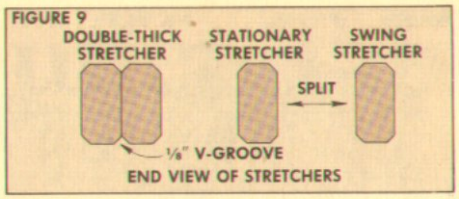

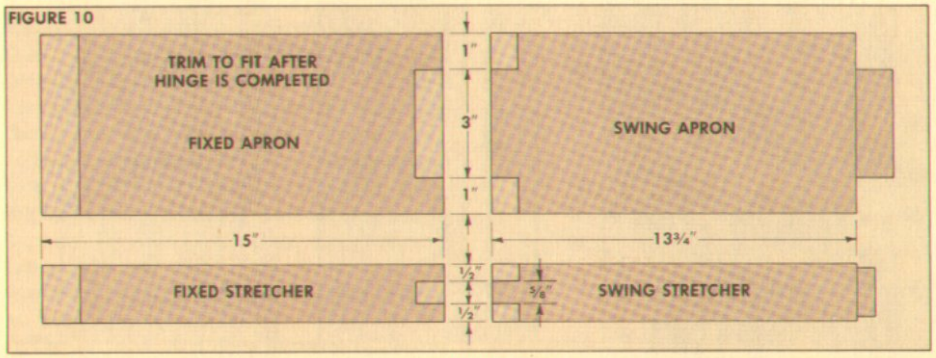

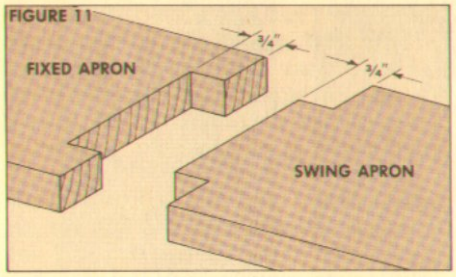

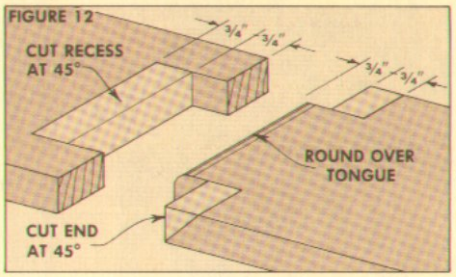

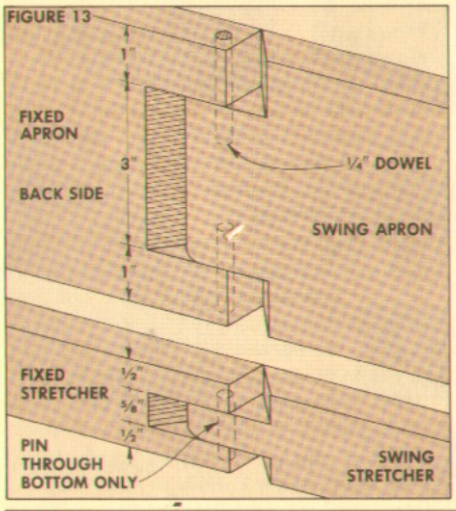

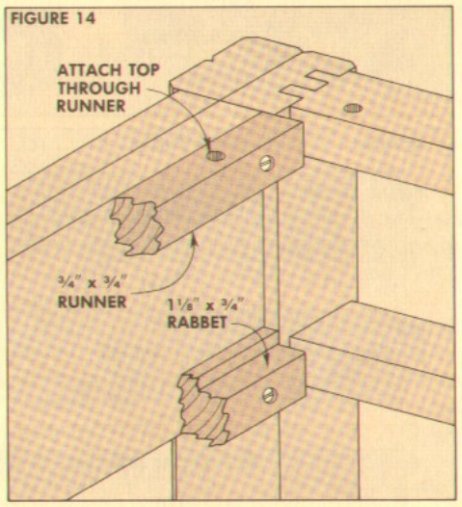

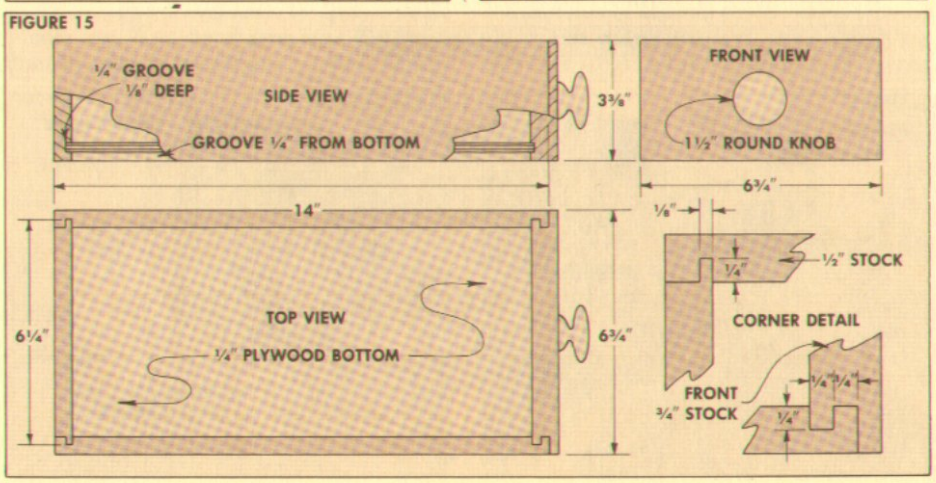

half must be 13¾" long from the shoulder of the tenon to the end (this is half the length of the full-length apron shown in Fig. 3). This same madness is duplicated in the stretchers at the bottom of the legs.

HINGE JOINT. Once the two halves of this apron are cut to rough length, the hinge joint can be made. This joint is kind of a hassle, but kind of fun too. It starts out as a modified box joint, Fig. 11.

Then, to make this joint function as a hinge, the recesses are beveled to 45°, (by hand with a sharp chisel), and the "tongue" on the swing apron is rounded over slightly, Fig. 12.

To finish this hinge, holes must be drilled for the pins. I clamped the two halves together (with a *Jorgensen* hand screw) and drilled a ¼" hole 1½" deep at the center point of each joint, Fig. 13.

MOUNTING SWING LEGS. Go ahead and hinge together the two halves of these aprons and stretchers, and place these assemblies on their full-length counterparts on the assembled "frames." Mark the square end of the fixed apron and trim it so the hinge joint is centered on the full-length apron.

The fixed halves of the aprons and the stretchers can now be glued to the full-length pieces. When the glue is dry, attach the "swing" halves to the fixed halves once again, and then glue the swing legs to the swing aprons and stretchers.

THE DRAWERS

A long time ago we were talking about two "frame" assemblies that were only dry-assembled. Before the drawer rails can be glued in, the drawer runners should be mounted. The runner on the top edge of the apron prevents the drawer from tipping down as it's opened, and also serves as a cleat to screw on the table's top. The runner on the bottom should be rabbeted to fill in the gap between the leg and apron, Fig. 14.

The two "frames" can now be joined by gluing in the four drawer rails and the two bottom stretchers. At last, the base is complete . . . except for the drawers.

THE DRAWERS. The two drawers are fairly easy to make. To get a good fit in the openings at both ends of the table, I worked from the actual measurements of these openings. I cut the drawer fronts to fit tight between the legs, and about 1/16" less than the (up and down) measurement between the rails. Then the sides and bottom are cut to fit the dimensions of the drawer front, Fig. 15.

The drawer sides are joined to the front and back with a half-blind rabbet and groove joint. (See *Woodsmith* No. 18 for step-by-step on cutting this joint.) After the drawers are assembled, I planed down the sides (just a smidgen) so they fit with minimal clearance in the openings.

THE TABLE TOP

Although the table's top can be made of glued-up pieces of solid wood, I opted for an easier approach — ¾" cherry plywood. The top is sized so it can be cut from a 4'x4' (half) sheet of plywood.

The top consists of three pieces: a center piece that is attached to the base, and two half-circle leaves. Since I wanted to retain the original grain pattern of the plywood when the leaves are up, I cut the 12"-wide center piece out of the middle of the half-sheet of plywood, Fig. 16.

HALF-CIRCLE LEAVES. To be certain the two half-circle leaves would be exactly the same, I joined the two remaining pieces of plywood and cut one continuous circle.

To do this, a ½"-wide filler strip is inserted between the two pieces of plywood. Then all three pieces are tacked together (on the bottom side) with a piece of scrap ¼" plywood, Fig. 17. Now a large circle can be cut with a router and the trammel attachment. (Our version of this trammel attachment is shown on page 13.)

However, before cutting out the circle, I routed a ⅛"-wide groove around the perimeter of the table top for an inlay piece, Fig. 18. This groove has a radius of 16⅜".

Now the trammel attachment can be realigned to cut the outside perimeter of the table top. The radius here is 17". I used a ¼" carbide-tipped straight bit to rout this circle, making several passes, ⅛" to ¼" deep each time. Fig. 19.

Once the two half-circles are cut, place the center piece between them and trim both ends to match the diameter of the circle. Then rout the ⅛" groove for the inlay piece, Figs. 20 and 21.

INLAY PIECE. The inlay piece adds a nice (almost elegant) touch to the top, and it's easier to insert than it might seem. All I did is rip an ⅛"-thick strip of walnut 60" long and tapped it into the groove (apply glue in the groove first). This strip is thin enough (and the radius large enough) so you don't have to steam it to get it to bend.

FINISHING UP

The leaves are attached to the center piece with two 30"-long continuous hinges. These hinges are mortised in to allow clearance for the swing legs. I routed the hinge mortises with an edge guide attachment on a router, stopping the mortises 2" from each end, Fig. 22. Then chamfer the bottom edges to prevent binding, Fig. 23.

FINISHING. We used *Hope's* Tung Oil Varnish to finish this table. This oil finish has just enough varnish to protect the table top, yet it can be applied with the ease of any oil finish. After applying three coats, I gave it a coat of *Renaissance* wax (available from Woodcraft Supply). This will yield a beautiful satin finish, suitable for any table.

FIGURE 16

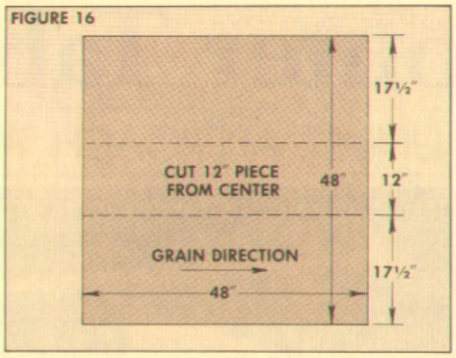

FIGURE 17

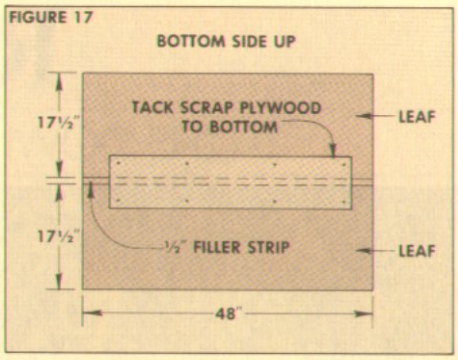

FIGURE 18

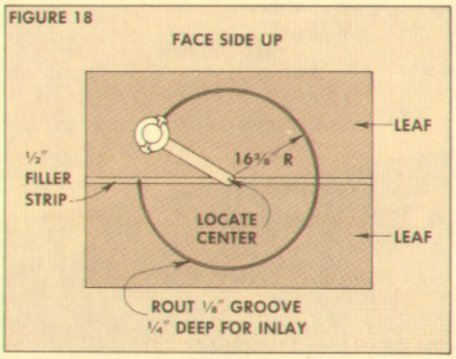

FIGURE 19

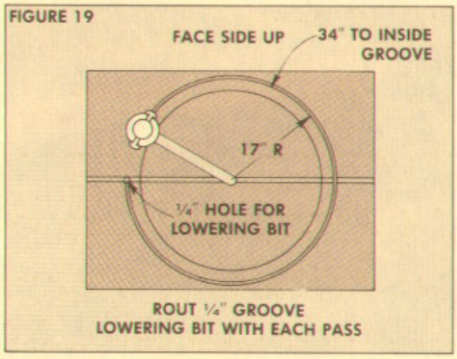

FIGURE 20

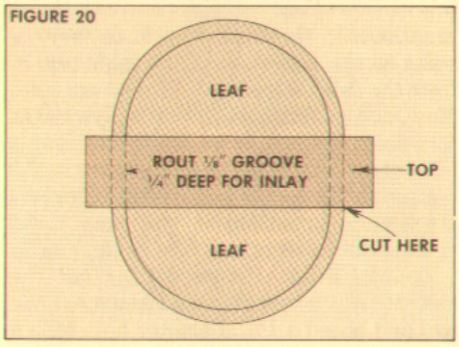

FIGURE 21

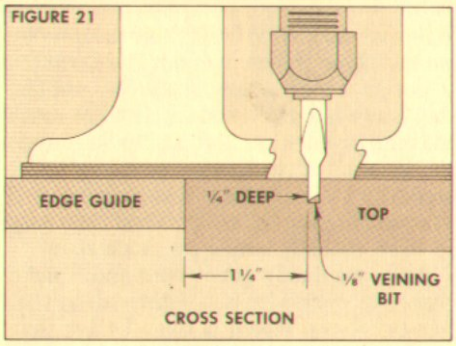

FIGURE 22

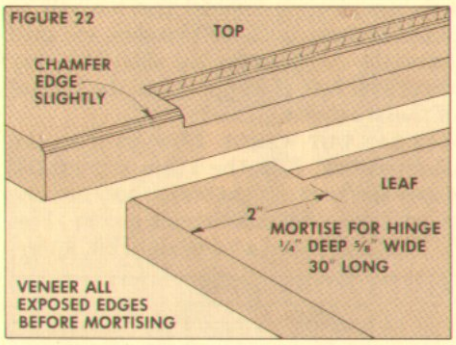

FIGURE 23

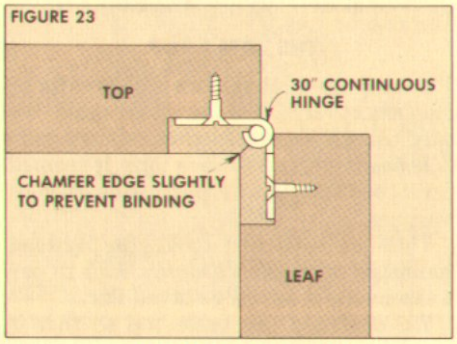

MATERIALS LIST

A	Double Legs (4)	1 1/16 x 2⅛ - 28¼
B	Split Legs (4)	1 1/16 x 2⅛ - 28¼
C	Aprons (2)	13/16 x 5 - 28¾
D	Swing Aprons (2)	13/16 x 5 - 30
E	Stretchers (2)	13/16 x 1⅝ - 27¾
F	Swing Stretcher (2)	13/16 x 1⅝ - 30
G	Double Stretcher (4)	13/16 x 1⅝ - 7¾
H	Drawer Rails (4)	13/16 x 1⅝ - 7¾
I	Drawer Front (2)	13/16 x 3⅜ - 6¾
J	Drawer Sides (4)	½ x 3⅜ - 14
K	Drawer Backs (2)	½ x 3⅜ - 6¼
L	Plywood Top	¾ x 48 - 48
M	72" Continuous Hinge	

CUTTING DIAGRAM

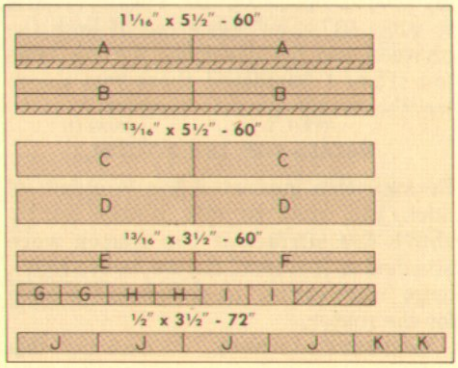

Router Table

THE DOWN-UNDER APPROACH TO ROUTING

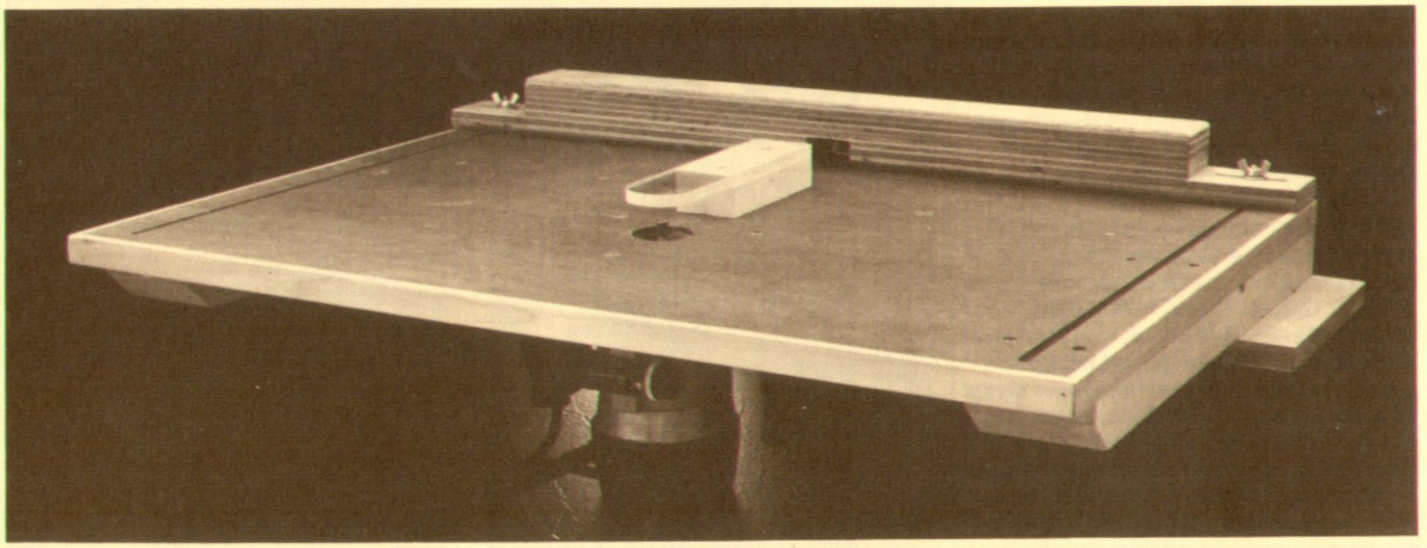

When we decided to build this router table, we had three things in mind: 1) we wanted to design it with a "low profile" — not like the "store-bought" models that are much too high to work on, 2) it had to be easy to clamp to the edge of a workbench with free access to the router for changing bits and to adjust the height, and 3) it had to be easy to store without taking up much room.

After we finally got it built and I had a chance to work with it, I'd have to say that this bench-top model is even better than the floor model shown in *Woodsmith* No. 5.

THE TABLE TOP

The table top created more problems for us than any other part of the router table. We tried using a piece of kitchen counter (particle board with a *Formica* top). It seemed like a good idea, but the particle board kept warping.

Then we switched to ¾" fir plywood laminated with ⅛" *Masonite*. And to our amazement, it actually stayed flat.

We designed the table top so that it could be cut out of 2'x4' pieces of ¾" plywood and ⅛" *Masonite*. The first step is to cut a 21" x 30" piece out of both the plywood and the *Masonite* for the table top. Then I laminated these two pieces together using contact cement.

RECESS FOR THE ROUTER

Because this laminated top is a full ⅞" thick, you won't be able to raise the bit above the surface if the router were attached as it is now. So, we had to rout a large "countersink" on bottom of the table for the router.

PERIMETER GROOVE. To rout out this countersink, the first step is to mark a point on the underside of the table top, 8" from the front edge and 15" from each side. Now, drive a finish nail into the plywood at this point and use it as a pivot to rout a ¼"-wide, ⅜"-deep perimeter groove in the bottom. If the router is moved in a counter-clockwise direction, it will stay tight against the nail for the entire circle, Fig. 2.

COLLET HOLE. Before cutting out the rest of the "countersink", I removed the nail and bored a 1¾" diameter hole with a hole saw, Fig. 3. I found that it's best to start this hole on the bottom side, and then finish the cut from the top side. This way there's no fear of chipping out the surface of the *Masonite*.

CLEAN OUT WASTE. Now back to the countersink. Flip the table top upside down and rout out the waste between the collet hole and the perimeter groove, Fig. 4. This time I used a ¾" straight bit, lowering the bit ⅛" with successive passes until I reached a depth of ⅜".

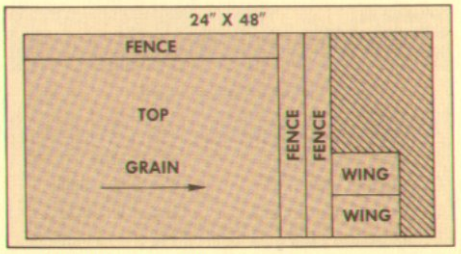

FENCE GUIDE SLOTS. Later, when the fence is made, it is held to the router table with two bolts that extend through slots cut in the table top. To make these slots, first drill four ¼" holes to mark the starting and stopping points of the slots, Fig. 5. These holes are 1" from the front and back edges, and centered 1¾" from the outside edges. After drilling the holes, rout a ¼" slot between the holes, using a fence clamped to the top as a guide, see Fig. 5.

MOUNTING THE ROUTER

To visualize how the router is attached, think of the table top as an elaborate version of the plastic base on the router. To mount the router, I removed the plastic base and used it as a template to mark the location of the mounting holes. First I positioned this base on the top of the table, centered over the 1¾" hole. Then I rotated the base so when the router is attached there's easy access to change bits and adjust the height.

After marking the location of the holes, I drilled countersink holes in the table top for ¾" flat-head machine screws. These screws go through the same holes in the router used for attaching the plastic base.

THE SUPPORT FRAME

The next step is to assemble the support frame. The two support arms are simply 2x4s 19" long, Fig. 1. These arms have a ¾"-wide groove down the middle to allow clearance for the bolts used to attach the fence, see Detail in Fig. 6.

When attaching these support arms to the table top, align the back edge of the arms with the back edge of the table. Then countersink No. 8 x 2" flat-head screws on both sides of the fence guide slot.

To keep the table top from sinking in the middle, I added a 2x2 cross support. Simply cut the 2x2 to fit tight between the support arms and glue and screw it to the

table top (countersinking the screws).

Finally, two clamping "wings" are cut from some of the scrap ¾" plywood (left over from the top) and screwed and glued to the bottom of the support arms.

To finish off the top I added pine strips around the edges to prevent the *Masonite* from being chipped.

THE FENCE

The fence is made of three pieces of ¾" plywood laminated together. I used plywood because it has less tendency to warp or twist than solid wood.

To make the fence, rip three pieces of plywood 3" wide, 30" long. At both ends of one piece drill a series of ¼" holes to form a 2"-long slot, Fig. 6. Then trim the other two pieces to 24" in length and glue them to the bottom piece.

After the glue has set, trim the front and back faces of this fence on the table saw so these faces are absolutely perpendicular to the table top. It's also helpful to chamfer the bottom edge of the fence to create an escape path for sawdust.

There will be times you'll want to position the fence over a router bit to make a cut. To do this, cut a large notch (1" high, and 1¾" wide) at the center of the fence, Fig. 6. Since this notch is over the bit, the fence also serves as a guard.

ATTACHING THE FENCE. The fence is mounted in the guide slots with ¼"x2½" carriage bolts and wing nuts. To keep the bolts from rotating as they're being tightened, I made a ⅝" square "washers" out of ¼" plywood to fit on the heads of the carriage bolts. The washers slide in the dado in the support arms, but bind as the wing nut is tightened.

ROUTER GUARD. When router bits with pilots are used for "free-hand" routing, it's best to make a guard to fit over the bit. The guard I made is simply a piece of scrap with a piece of ¼" plastic on top, Fig. 7. This guard mounts to the table top by means of two dowel pins on the bottom which mate with holes in the table top.

FINISHING. After the router table was completed, we finished it with *Watco Danish Oil* to protect the *Masonite*.

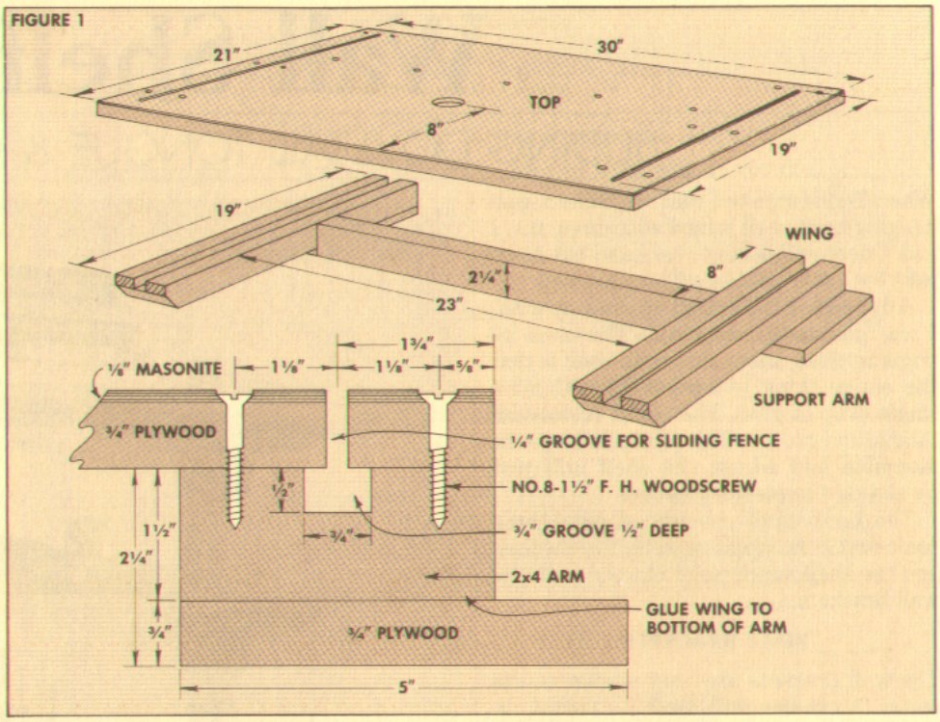

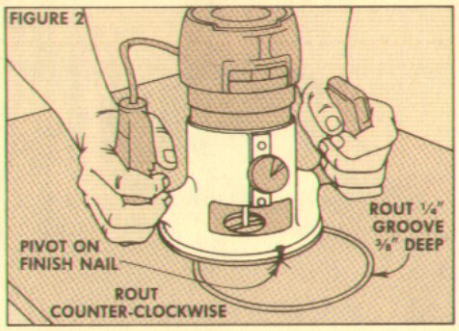

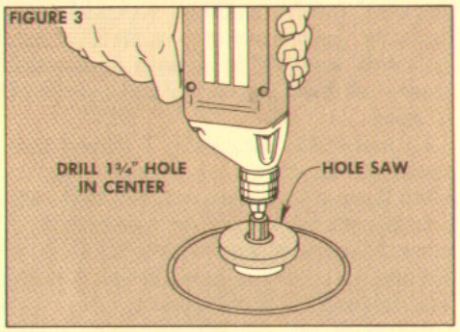

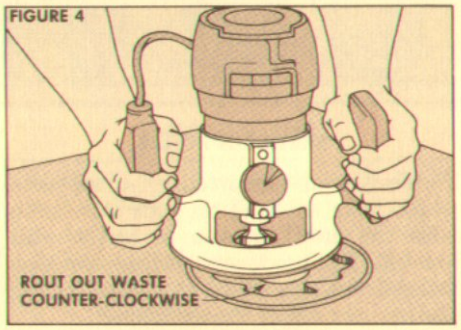

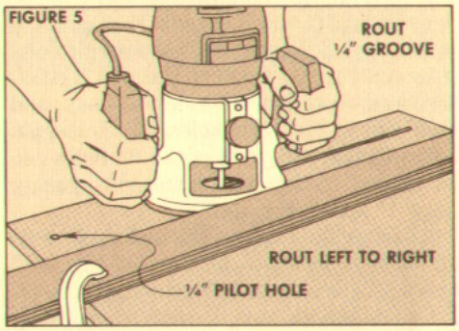

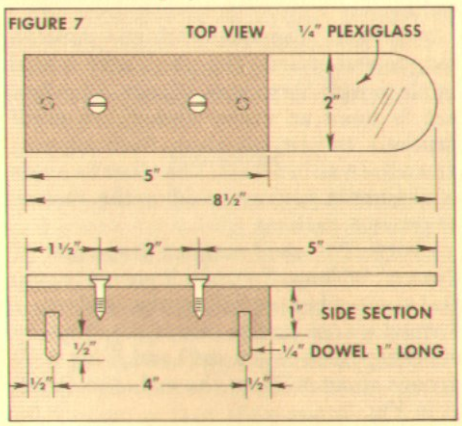

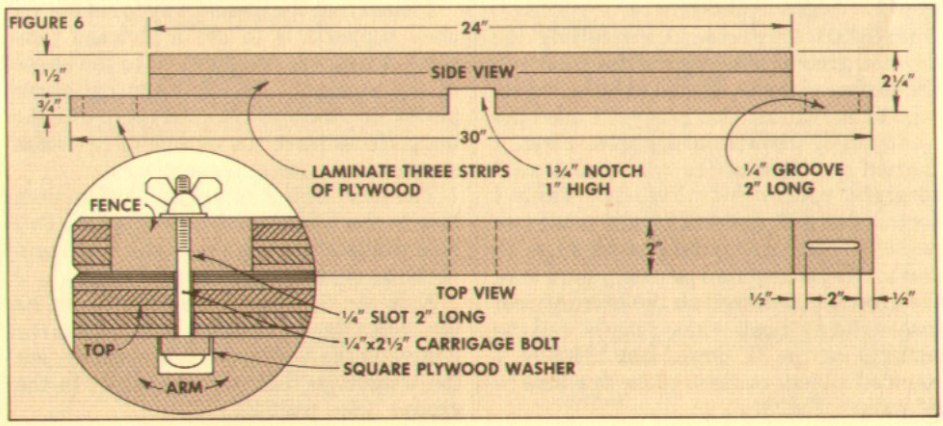

Wall Shelf

SLIDING DOVETAIL TONGUE & GROOVE

When Ted suggested that we make a wall hanging book shelf joined with dovetails, I had visions of laboring over hand-cut dovetails for some kind of offbeat project.

After seeing the design he came up with, I was pleasantly surprised. The most intriguing thing about this book shelf is that the entire thing is assembled without a single drop of glue. The trick? A dovetail tongue and groove. This joint allows you to assemble and adjust the shelf unit just by sliding the pieces together.

The book shelf consists of only three basic parts: the wall brackets, the shelves, and the shelf supports. I started with the wall brackets.

WALL BRACKETS

The wall brackets are very similar to the metal "store-bought" kind — except, in this case, they're made of 13/16"-thick oak. Basically, each bracket is a piece of oak 1 5/8" wide and 30" long with a dovetail groove cut down the center and a series of 3/8" holes.

To make wall brackets, I ripped two pieces of 13/16"-thick oak to size, Fig. 1. After these pieces were cut, the next step is to lay out the marks for a series of 3/8" holes, 1" apart, along the entire length of the brackets. (These holes accept dowels that support the shelf bracket.)

MOUNTING HOLES. The four holes at the very ends of the wall brackets are actually mounting holes. Since we used toggle bolts to mount this shelf unit to the wall, I counterbored these four 3/8" holes 1/2" deep, and then drilled 3/16" pilot holes for the toggle bolts. Finally, the rest of the 3/8" holes can be drilled (completely through) spacing them 1" apart, Fig. 1e.

After drilling all of the holes, I went ahead and sanded the face of the wall bracket before cutting the dovetail groove. This eliminates any danger of rounding over the edges of the groove.

DOVETAIL GROOVES. When cutting the dovetail groove, the width of the groove on the surface of the wall bracket is the important thing. To cut this groove, I used the router table shown on page 18. First, I cleaned out most of the waste with a 1/4" straight router bit, Fig. 1a. Then I switched to a 1/2" dovetail bit and made two passes to cut the dovetail groove, Figs. 1b and 1c. By making two passes, you're sure the groove is centered on the bracket, and makes it a smidgen wider than 3/8" (on the surface) for the 3/8" dowel stop. Finally, I rounded all four corners of the brackets to 1/2" radius, Fig. 1e.

SHELF SUPPORTS

The shelves are supported by two supports which have dovetail tongues that mate with the dovetail grooves in the wall bracket. This produces a sliding joint that makes it easy to adjust the height of the shelves, yet offers sturdy support.

I found that the easiest way to cut the six shelf supports is to use a plywood template. First, cut the plywood to the shape of the support, Fig. 2. Then cut three pieces of stock to 3" x 12" and use the template to trace the outline of two shelf supports on each of these pieces.

The next step is to drill a 3/8" alignment hole in the top edge of each support. This hole will later accept a peg which will prevent the shelf from racking, Fig. 2.

Now the dovetail tongue can be cut on the back edge of each support. Using the groove in the wall bracket as a guide, cut the tongue so that it slides easily in the groove. (See page 22.)

THE SHELVES AND PEGS

The shelves are designed to be cut from a 1x10 (see Cutting Diagram), but they can be cut and glued up from narrower strips. The final dimensions of the shelves are 9" x 36". After the shelves have been cut to size and planed flat, I cut all four corners to a 2" radius.

THE PEGS. Together with the dovetail tongue and groove, the whole unit is held in place with three sets of pegs. The first set is used as stops under the shelf brackets to prevent them from slipping down the wall brackets. The other two sets of alignment pegs are used on the shelves to prevent racking.

STOPS. The shelf support stops are 3/8" dowels, 5/8" long. To make it easier to grip the stops when adjusting the shelves, I formed a knob on the end of the stops by chucking them into a drill and filing a V-groove about 3/8" from the end. See Detail A in Fig. 2.

ALIGNMENT PEGS. Two more sets of pegs are attached to the shelves to prevent racking. The first set is attached to the back edge of the shelves so they lock into the dovetail groove, see Figure 3.

To position the holes for these pegs, measure in 6" from each end of the shelves (this makes the holes 24" apart), and drill two ⅜" holes, ⅜" deep. Then glue in ¾"-long pegs so they lock into the dovetail groove.

The second set of pegs fit in the holes in the shelf supports and lock into holes in the bottom of the shelves. To align these holes on the bottom of the shelves, square a line from the pegs already on the back edge. Then drill ⅜" holes to align with the holes on the shelf supports. Finally, glue ¾"-long pegs in the shelf supports.

When the shelves are placed on the brackets, the pegs on the back edge should slide into the dovetail grooves, and the pegs on the shelf supports should mate with the holes on the bottom of the shelves.

Now there are two options: the shelves can be left the way they are, or a dovetail groove can be routed down the center for book ends, as shown in Fig. 4. The dovetail groove is cut the same way as on the wall brackets.

BOOK ENDS

The biggest hassle with book shelves is finding a way to keep the books from falling over. This is where the dovetail tongue and groove joint really comes through. A dovetail tongue is cut on the book ends (just like on the shelf brackets) so that it's loose enough to slide freely in a dovetail groove cut in the shelf. But as soon as the books start to fall over, pressure is applied to the top edge of the book end and the dovetail tongue binds in the groove.

To make the bookends, I cut two "tombstones" with a dovetail groove down the center, see Figure 4. Next, the two supports are cut to shape (similar to the shelf brackets). Then two dovetail tongues are cut on the supports, as shown in Figure 4. The first dovetail tongue is cut on the edge that fits in the groove in the shelf. This one can be somewhat loose.

The second dovetail tongue, though, is cut on the edge that attaches to the "tombstone." If this tongue is cut fairly tight, you might even get by without having to glue it into the support.

FINISHING

I rounded over the edges of all of the pieces on a router table with a ¼" corner round bit. Then I finished this book shelf with two coats of *Watco Danish Oil*. (An oil finish is best on this project because it won't clog up in the dovetail grooves.) After the oil was dry, I applied a light coat of paste wax to the shoulders of the dovetail tongues so they slide easily.

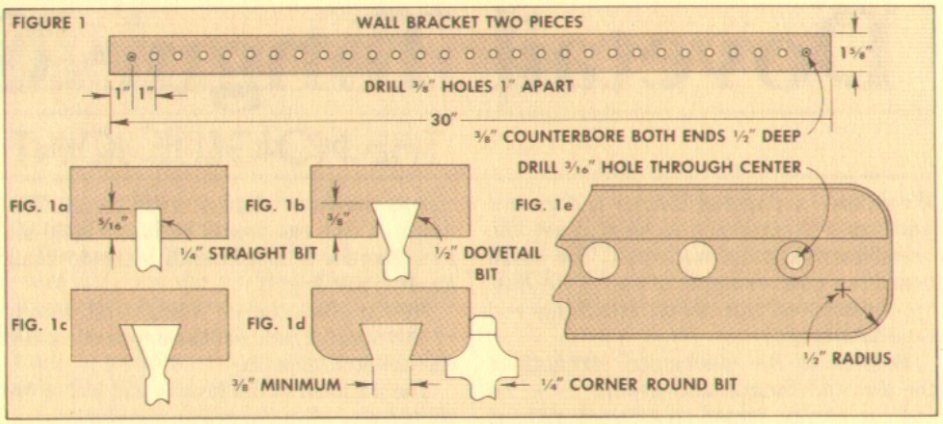

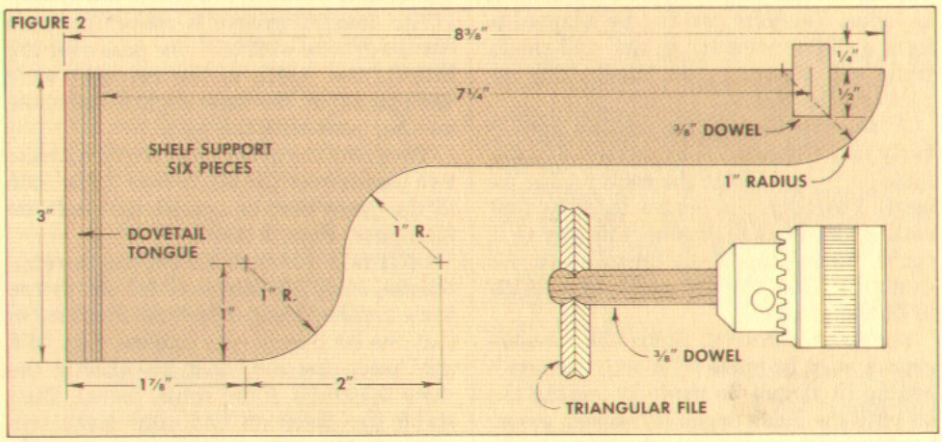

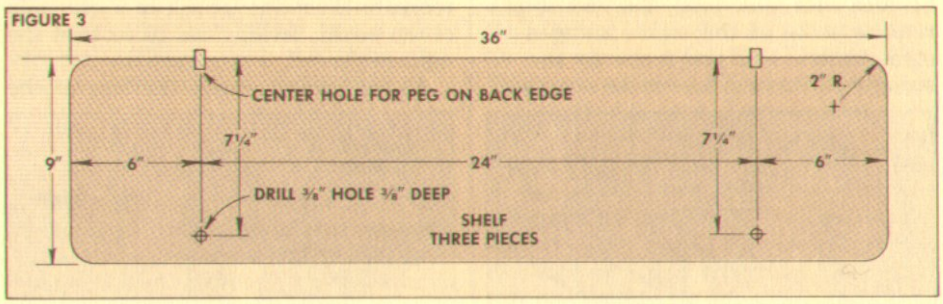

MATERIALS LIST

A	Shelf	13/16 x x 9 - 36
B	Shelf Support	13/16 x 3 - 12
C	Bracket	13/16 x 1⅝ - 30
D	Book End Supports	13/16 x 3 - 5⅜
E	"Tombstones"	13/16 x 4 - 5
F	⅜" Dowel Pegs	

CUTTING DIAGRAM

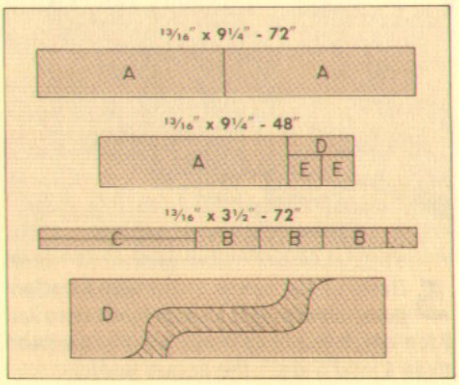

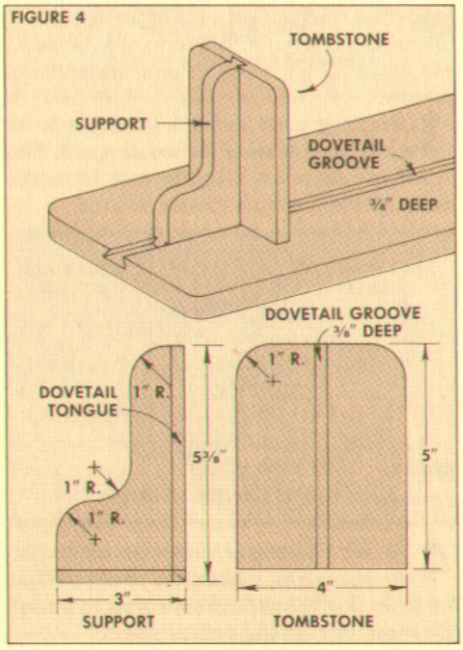

Dovetail Tongue & Groove

THE NO-GLUE JOINT

We've used a dovetail tongue and groove joint on two projects in this issue, the bread board and the wall shelf. The bread board is a good example of one of the best applications of this joint: attaching end caps to a board.

Because of the mechanical strength of the dovetail tongue and groove joint, an end cap can be joined to a board without any glue. The joint can also be adapted to form a sliding joint (as in the wall shelf), while still retaining the interlocking aspects of the joint.

A dovetail tongue and groove joint is fairly easy to make . . . if you have a router table (see page 18 for the router table we used). Basically, the joint is made by first cutting the dovetail groove (this groove is cut in the end cap of the bread board, for example). Then the dovetail tongue is cut to fit the groove.

DOVETAIL GROOVE. Since the dovetail groove must be made with only one depth setting (it cannot be made by raising the bit until the finish depth is reached, as can be done with most bits), the first step is remove some of the waste using a ¼" straight bit. Set the fence so the ¼" straight bit cuts a groove in the same position as the dovetail groove will be cut. The depth of this cut should be just a little bit less than the finished depth of the dovetail groove, see Fig. 1.

Now replace the ¼" straight bit with a ½" dovetail bit, and set the depth of cut for the dovetail groove.

The position of the groove can either be centered or off-centered on the workpiece. If the dovetail groove is off-center, then cut the groove with only one pass over the bit. (If the width of the cut isn't wide enough, adjust the fence slightly and make another pass with the piece.)

To center the groove on the piece, make two passes over the bit, reversing the side of the piece that is against the fence on each pass, Figs. 2 and 3.

DOVETAIL TONGUE. To cut the dovetail tongue, keep the dovetail bit set to the same depth setting and adjust the fence so that the bit barely cuts into the edge of a trial piece (be sure that it's exactly the same thickness of the actual piece). Then stand the piece on end, and make two passes on the router table, one on each side of the board, feeding the piece from the right to the left, Figs. 4 and 5.

At this point, check the size of the tongue (on the trial piece) with the dovetail groove. If it isn't too small, repeat the same procedure, using the actual workpiece.

Now move the fence a little closer to the blade. This is where a little patience pays off. Each time the fence is adjusted, make a trial cut on the scrap piece and check it with the groove to be sure that you won't be cutting off too much of the tongue with the new setting. (Remember, each time the fence is moved, you'll actually be doubling the amount of material being removed because the cuts are made on both sides of the tongue.) Repeat the trial cuts until a tight fit is obtained.

The fit of the tongue in the groove should be fairly tight, yet not so tight to cause the end caps to split as they are assembled. It's usually helpful to apply a little wax on the tongue to help it slide into the groove of the end caps. Even with the wax on the tongue, the end cap may need to be tapped on with a mallet.

In most cases this joint is not glued. Instead, a ¼" dowel pin is inserted from either the top or from the side of the joint to lock it in place. Be sure that the dowel is long enough to penetrate through both the tongue and the groove.

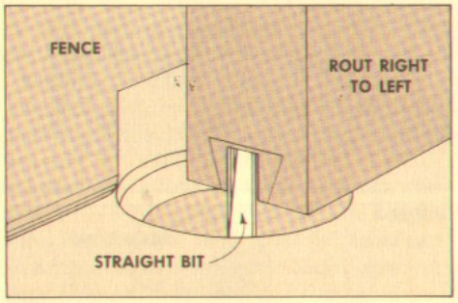

1 *Rout a groove with a ¼" straight bit to eliminate most of the waste wood. The depth of cut is set slightly less than the depth of the dovetail groove.*

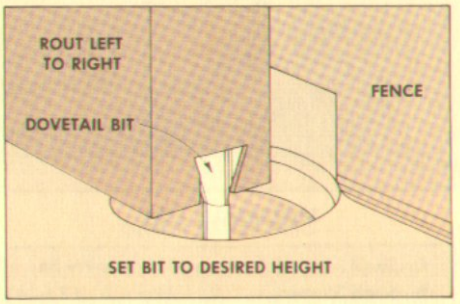

2 *Keeping the fence in the same position, replace the ¼" straight bit with a ½" dovetail bit. Then adjust the height of the bit and make the first pass.*

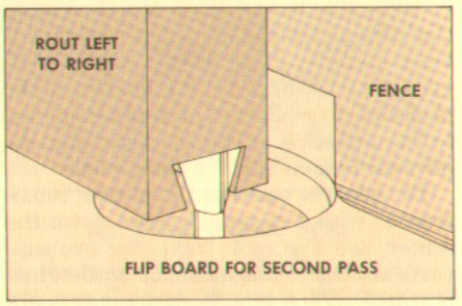

3 *To assure that the groove is centered, keep the fence and bit settings the same and make another pass, reversing the side of the piece that is facing the fence.*

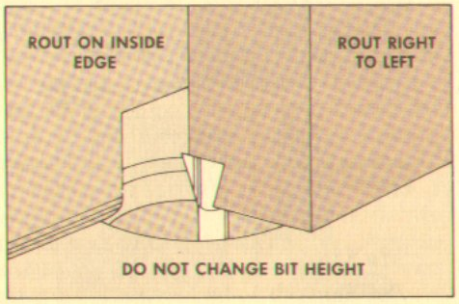

4 *To cut the tongue, keep the bit height the same and adjust the fence so that the bit makes a trial cut on a scrap piece of the same size as the actual piece.*

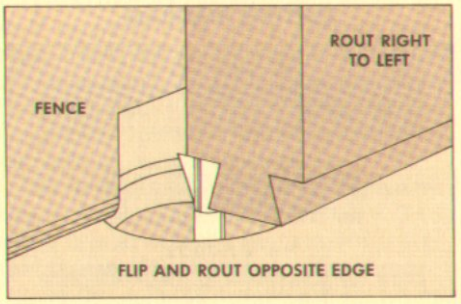

5 *Reverse the scrap and make another pass, checking it with the groove to see if too much has been removed. Then repeat steps 4 and 5 with the actual piece.*

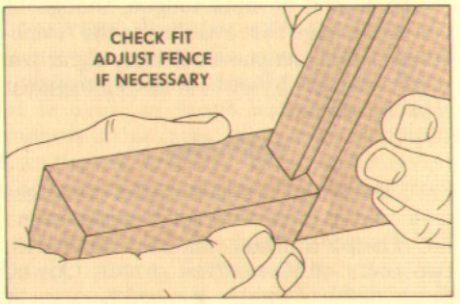

6 *After the tongue is cut on the actual piece, check it for fit with the groove. If the tongue's too large, repeat steps 4 and 5 until it fits the groove.*

Talking Shop

AN OPEN FORUM

UNIFORM HINGES

I'd like to share some first hand information on the hinges for the butler's tray table shown in *Woodsmith* Number 14. I have purchased the hinges from almost everyone I can locate who stocks them, and most of them are irregular, just like the ones you had to custom fit individually.

The best hinges I found were from *Constantine*, out of New York. Their address is: *Constantine*, 2065 Eastchester Rd., Bronx, New York 10461. Catalog: $1.50. They're uniform in size and a template made from one hinge works for all the hinges.

The round edge hinges are brass plated steel that has been antiqued. They're much better looking than any of the other hinges I tried, and their movement was very easy. Some of the hinges from other firms required pliers to free up the mechanisms!

The price was $7.00 per hinge and I feel that they are the best available.

Don Reuter
Columbus, Ohio

COVES ON THE TABLE SAW

I've had a little bit of trouble cutting the cove on the table saw for the octagonal clock in *Woodsmith* Number 12. I keep cutting the cove too wide. What diameter blade did you use and does the blade size make any difference?

Roger Clay
Kingsport, Tennessee

When cutting a cove on a table saw, three things determine the size and shape of the finished cove. First, the height of the blade. Second, the angle at which the wood is introduced into the blade. And third, the diameter of the blade.

The height of the blade determines the finish depth of the cove.

The angle of attack determines the width of the cove. As the angle of attack is increased (feeding more into the side of the blade), the width will increase.

The diameter of the blade in combination with the angle of attack determines the arc of the cove. The diameter of the blade by itself, is probably the least important factor in cutting a cove. Basically, a smaller diameter blade will produce a cove with slightly more arc.

Because all three of these factors contribute to determine the final size and shape of the cove, it can be quite nerve racking trying to set up the saw correctly by trial and error.

The easiest way to set up for cutting coves is to use the jig that was shown in Woodsmith *Number 12. All the jig really does, is show you what angle to attack the blade to produce a cove with a predetermined width and height.*

To use the jig, spread the two long bars to the width of the cove needed (if you need a 2" wide cove, set the bars 2" apart). Then raise the saw blade to the desired height (which will be the depth of the cove), and place the jig over the saw blade.

Align the jig so that it's touching both the front and back edges of the blade. Then mark a line on the table saw along the inside of the bar at the "back" side of the blade. Remove the jig, and clamp a fence parallel to the line on the table top, allowing enough room for a shoulder on each side of the cove.

CUTTING ODD ANGLES

Many plans call for the cutting of angles other than 90° and 45°. How do you set a saw blade at precisely 22½° or any other odd angle? I'm presently using the trial and error method, any suggestions?

David L. Gardner
Monroe, Washington

Setting a table saw to an odd angle is a headache for us, too. What seems to work the best is to use an artist's adjustable triangle. These triangles are calibrated in ½° increments and can be easily adjusted to ¼° settings quite accurately.

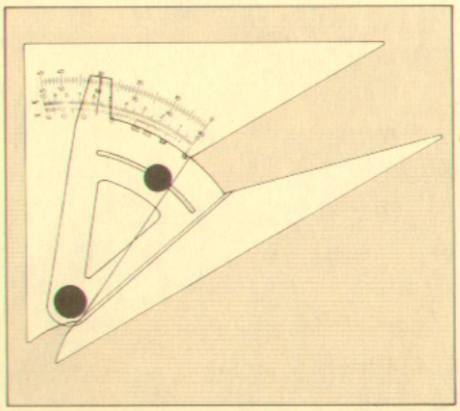

Although the adjustable triangle isn't 100% accurate, it does allow you to get closer than any other measuring device that we've seen.

To set the angle of cut using an artist's triangle, press the edge of the triangle against the flat part of the saw blade, making sure it doesn't touch any of the teeth. The set in the teeth can throw the measurement off far enough to make quite a difference.

Adjustable triangles can be purchased from: Garrett Wade, *161 Ave. of the Americas, New York, N.Y. 10013. (Catalog: 3.00).*

FROZEN GLUE

I need help! During this year's crazy Indiana January, several gallons of both my yellow (aliphatic resin) and white (polyvinyl acetate) glue froze up. The white glue was obviously ruined (or so it appeared). The yellow glue, however, appeared just fine after thawing out in the living room. Are they suitable to use on a project?

I need to know in a hurry, so I'll know if I should take it as a loss on Uncle Sam's April 15th filing.

Richard L. Gerard
Carmel, Indiana

To answer your question, we contacted Jack Gerard (any relation?), the technical service manager for The Franklin Glue Company, *makers of* Titebond *glue.*

According to Jack, Franklin's *aliphatic resin and polyvinyl acetate glues are what they call freeze/thaw stable. What this means is that their glue has been put through a freeze-thaw cycle 5 times and it still remained usable. (We froze a bottle of* Titebond *glue, and after it had thawed, it was as good as new.)*

He did mention that sometimes, after freezing, the glue will have a consistancy of cottage cheese. According to Jack, the consistancy of the glue should return to normal just by stirring it. If it remains in the cottage cheese-like state, or if it doesn't return to its normal fluid state, it should be discarded. But normally, the glue should be reusable even after it has been frozen several times.

He also advised against trying to dilute the glue to eliminate the cottage cheese effect. This reduces the number of solids left after the water has evaporated, reducing the strength of the glue.

Jack also mentioned that the shelf life of Franklin's *glue is listed as six months. Then, almost in the same breath, he said that as long as the glue is still in its normal fluid state and has an even consistancy (which may require stirring), it should still be good, regardless of its age.*

Concerning the tax write off, I wouldn't touch that with a ten foot board! — S.K.

Bread Board

A LOAF NEVER HAD IT SO GOOD

When a bread board was suggested for the project on the back page, my first thought was that any old cutting board would work just fine for cutting bread. Then it dawned on me that using the cutting board I have at home would be a great way to get meat flavored bread.

Basically, the bread board consists of a laminated top, with end caps that are attached using a pinned dovetail tongue and groove joint. And since the easiest way to cut this joint is on a router table, the bread board's an ideal project to try out the new router table on page 18.

LAMINATED BOARD. The main body of the bread board is made by edge-gluing strips of ¾"x¾" maple and cherry. The first step is to cut 8 strips of maple and 9 strips of cherry 15" long. Then the strips are glued together, alternating them so that a piece of cherry is on both outside edges.

When the pieces are clamped together, keep all of the ends flat by wrapping wax paper over them and clamping them with *Jorgenson* hand screws (or between two boards). After the glue has dried, cut both ends square so that the board is 14½" long.

END CAPS. The end caps are made out of maple and are attached with a pinned dovetail tongue and groove. The first step is to cut the end caps 2" wide and as long as the top is wide, Fig. 1. Then rout a ¼"-deep dovetail groove on the inside edge of the end caps (see page 22).

After the groove is cut, the dovetail tongues on the ends of the board are cut to fit very snugly in the groove, Fig. 2.

However, before the end caps are attached, I used a "core box" bit on the router table to rout the finger grips on both sides of the end caps, Figs. 2 and 4.

ASSEMBLY. At this point, I waxed the tongues of the board to help them slide in the groove when assembled. Even with the wax, they may need to be tapped on with a mallet.

To keep the end caps in place, drill a ¼" hole through the end cap and into the board, then glue in a ¼" dowel, see Fig. 3. By pinning the end caps rather than gluing them, there's little chance of the top splitting as it expands and contracts.

THE LAST STEPS. To smooth the top it's better to use a belt sander rather than a hand plane, because the grain of the top runs in different directions.
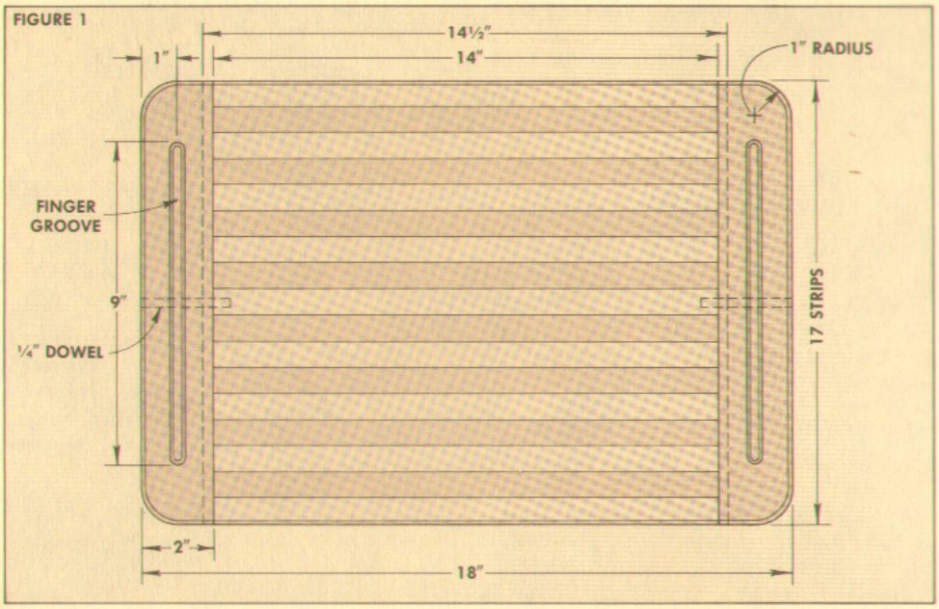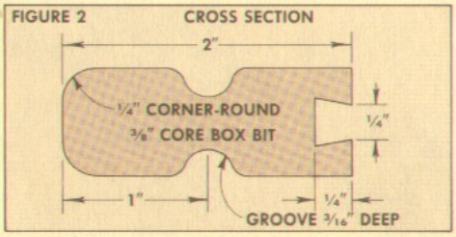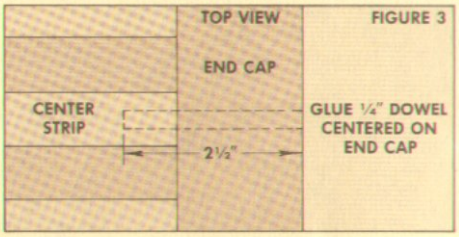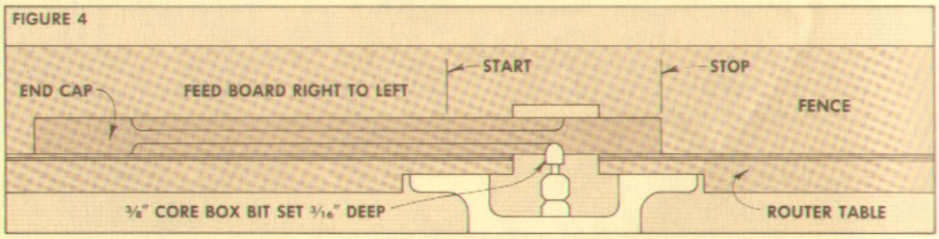
After the bread board is sanded, cut the corners of the board to a 1" radius, and round over all of the edges using a ¼" rounding over bit. We finished the board using *Behlen Salad Bowl Finish*.